This is a reproduction of a library book that was digitized by Google as part of an ongoing effort to preserve the information in books and make it universally accessible.

Google books

https://books.google.com

DOC.
D 207.208/2:
T63/2

Naval Education and Training Command

NAVEDTRA 12435
September 1991
0502-LP-215-9300

Training Manual
(TRAMAN)

Torpedoman's Mate Second Class

DEPOSITORY
FEB 03 1992
UNIVERSITY OF ILLINOIS
AT URBANA-CHAMPAIGN

DISTRIBUTION STATEMENT A: Approved for public release; distribution is unlimited.

Nonfederal government personnel wanting a copy of this document must use the purchasing instructions on the inside cover.

0502LP2159300

Digitized by Google

UNIVERSITY OF
ILLINOIS LIBRARY
AT URBANA-CHAMPAIGN
BOOKSTACKS

Although the words "he," "him," and "his" are used sparingly in this manual to enhance communication, they are not intended to be gender driven nor to affront or discriminate against anyone reading this text.

DISTRIBUTION STATEMENT A: Approved for public release; distribution is unlimited.

Nonfederal government personnel wanting a copy of this document must write to Superintendent of Documents, Government Printing Office, Washington, DC 20402 OR Commanding Officer, Naval Publications and Forms Center, 5801 Tabor Avenue, Philadelphia, PA 19120-5099, Attention: Cash Sales, for price and availability.

Digitized by Google

Naval Education And Training Program Management Support Activity

TORPEDOMAN'S MATE SECOND CLASS

NAVEDTRA 12435

DEPARTMENT OF THE NAVY
CHIEF OF NAVAL EDUC AND TNG

1991 Edition Prepared by
TMCM Jack L. FormyDuval

Digitized by Google

Digitized by Google

xc.
'207.208/2.
-63/2

PREFACE

This Training Manual (TRAMAN), *Torpedoman's Mate Second Class,* NAVEDTRA 12435, and the nonresident training course (NRTC), NAVEDTRA 82435, form a self-study training package covering the knowledges required of the men and women of the U. S. Navy and Naval Reserve to prepare for advancement to TM2.

Designed for individual study rather than formal classroom instruction, the TRAMAN provides subject matter that relates directly to occupational standards for TM2. The occupational standards, used as minimum guidelines in the preparation of the manual, can be found in the *Manual of Navy Enlisted Manpower and Personnel Classification and Occupational Standards* (Section I), NAVPERS 18068E. An NRTC has been developed for use with this TRAMAN. It must be ordered separately from this TRAMAN. Ordering information is available in the *List of Training Manuals and Correspondence Courses*, NAVEDTRA 12061. Each assignment is a series of questions based upon the textbook. You should study the text book pages given at the beginning of each assignment before trying to answer the questions in your NRTC.

This TRAMAN and associated NRTC were prepared by the Naval Education and Training Program Management Support Activity, Pensacola, Florida, for the Chief of Naval Education and Training. Technical assistance was provided by the Chief of Naval Technical Training, Millington, Tennessee; Service School Command, Orlando, Florida; and Naval Sea Systems Command, Washington, D.C. Technical reviews, comments, ideas, and suggestions from these activities have been most helpful.

1991 Edition

Stock Ordering No.
0502-LP-215-9300

Published by
NAVAL EDUCATION AND TRAINING PROGRAM
MANAGEMENT SUPPORT ACTIVITY

UNITED STATES
GOVERNMENT PRINTING OFFICE
WASHINGTON, D.C.: 1991

Digitized by Google

THE UNITED STATES NAVY

GUARDIAN OF OUR COUNTRY

The United States Navy is responsible for maintaining control of the sea and is a ready force on watch at home and overseas, capable of strong action to preserve the peace or of instant offensive action to win in war.

It is upon the maintenance of this control that our country's glorious future depends; the United States Navy exists to make it so.

WE SERVE WITH HONOR

Tradition, valor, and victory are the Navy's heritage from the past. To these may be added dedication, discipline, and vigilance as the watchwords of the present and the future.

At home or on distant stations we serve with pride, confident in the respect of our country, our shipmates, and our families.

Our responsibilities sober us; our adversities strengthen us.

Service to God and Country is our special privilege. We serve with honor.

THE FUTURE OF THE NAVY

The Navy will always employ new weapons, new techniques, and greater power to protect and defend the United States on the sea, under the sea, and in the air.

Now and in the future, control of the sea gives the United States her greatest advantage for the maintenance of peace and for victory in war.

Mobility, surprise, dispersal, and offensive power are the keynotes of the new Navy. The roots of the Navy lie in a strong belief in the future, in continued dedication to our tasks, and in reflection on our heritage from the past.

Never have our opportunities and our responsibilities been greater.

Digitized by Google

CONTENTS

CHAPTER	Page
1. Safety, Shipping, Handling, Loading, and Recovery . . .	1-1
2. Torpedo Maintenance Program (General) and Mk 46 Mod 5 Torpedo Maintenance	2-1
3. Heavyweight Torpedo Maintenance	3-1
4. Maintenance of Missiles and Mobile Submarine Simulators Systems	4-1
5. Mechanical and Electrical Maintenance	5-1
APPENDIX	
I. Glossary	AI-1
INDEX	INDEX-1

Digitized by Google

Digitized by Google

CHAPTER 1

SAFETY, SHIPPING, HANDLING, LOADING, AND RECOVERY

OVERVIEW

Discuss safety guidelines and procedures for shipping, handling, loading, and recovery of various types of torpedoes and weapons.

OUTLINE

Safety

Shipping
Handling
Loading
Recovery

A number of different types of weapon systems are used by the Navy. The handling of equipment and procedures used in moving weapons from the depot to storage, to pierside, aboard a ship or submarine are of such variety and number that we will not attempt to cover all of these systems and procedures in this chapter. These step-by-step procedures for handling, shipping, and loading of each torpedo or weapon system are located in the applicable OP or OD. It is a must that these procedures be followed during handling and stowage operations. But, before we discuss handling, it is imperative that we reinforce our awareness of safety, which will be our first area of discussion.

SAFETY

Your major concern during weapons handling and stowage evolutions will be safety. Safe handling and stowage operations must be a team effort. Ensure that the utmost care and discretion are exercised by everyone involved in handling weapons. All personnel must be trained and qualified to perform their job expeditiously and safely in accordance with the guidelines discussed in *Ammunition and Explosives Ashore*, NAVSEA OP 5, Volume 1, and *Ammunition Afloat*, NAVSEA OP 4.

SAFETY PHILOSOPHY

Safety has been described as a state of mind. A state of mind engendered from the top echelons of command down to the lowest working level by the demonstration of sound knowledge and awareness of safety requirements. A knowledge that is constantly applied by positive action and good leadership on the part of senior personnel in all areas affecting safety. Most accidents can be prevented, but this requires the full cooperation of every person concerned. **Safety is a function of all hands,** not only of individuals who have been specifically designated as safety observers. Safety is more than a duty owed to authority. Where explosive munitions are concerned, it is a way of life and the means of survival for the individual as well as his shipmates. Basic elements of safety are given in the following paragraphs.

1. Your sound knowledge of safety principles should be based on thorough training.
2. Your application of this sound knowledge should be under close and constant qualified supervision.

Only by the continuous and vigorous application of these basic elements of safety can the level of ordnance accidents/incidents be reduced and, hopefully, eliminated.

Digitized by Google

SAFETY PRECAUTIONS

Safety precautions clearly, concisely, and in the simplest language, state what is, or is not, to be done. Great care is exercised to ensure they do just that. They should be easily understood and not subject to misinterpretation; they should be explicit and allow no recourse except positive compliance. It is difficult to cover every possible emergency that may arise, but an attempt should be made in carrying out prescribed safety precautions to grasp the ideas on which they are based. In this way, circumstances not known at the time of promulgation of the safety precautions can be instinctively acted on in the future.

Safety precautions are a serious matter. With their compliance may rest the future, well-being of everyone on board and indeed the ship itself. Safety precautions that are stated in peremptory terms; that is, where action is expressed using such terms as "shall," "will," and "must," have the force of an order and must be obeyed accordingly. Safety precautions using the terms "should" or "may" are to be followed as a matter of policy. Deviation in such cases is permitted, but only where the urgency of the situation fully justifies such nonconformity.

The application of sound safety principles to all activities in which we engage is an old precept practiced from the dawn of time. Indeed expressed in the simplest terms, it is intuitive and forms one of the basic instincts by which we all can survive. However, as society continued to develop a more technical way of life, it became evident that instinct wasn't sufficient. The technical nature of our world requires that cohesive thought be applied to matters of safety where dangerous and involved activities are a concern. Probably at this point in time, we could say that the need for safety precautions became apparent. Nevertheless, as our civilization advanced and our activities grew more complex, our concept and requirements for safety continued to expand and change to fit our everyday needs. These needs likewise became more extensive and complex, especially in regard to armaments and war. This developed the necessity to establish safety rules in written form. The addition of safety rules to the written language added the quality of standardization. This in turn made it possible to change the rules as time required.

Certain safety precautions are in a form of visual signs or written captions embedded in the text to notify you of a possible danger to person or damage to equipment. Where applicable, a precaution is mentioned as a WARNING or CAUTION prior to the procedural directions it affects.

1. WARNINGS. Hazards that can cause personnel injury are indicated in notes headed by the word "WARNING." These warnings generally fall into three categories.
   a. Warning against poisonous fumes or harmful fluids.
   b. Warning against explosive or flammable components.
   c. Warning against mechanical hazards. These warnings are normally brief, such as calling attention to the danger involved in standing under a suspended torpedo. Operating personnel reading such warnings, are expected to use common sense in avoiding the hazard.

2. CAUTIONS. These are captions that draw attention to situations that may be potentially damaging to equipment. They are mentioned in notes headed by the word "CAUTION." A typical caution might be written for improper lifting, pushing, or pulling on control surfaces during the handling of torpedoes.

3. NOTES. These are captions that follow applicable steps that direct action and serve to amplify the action to be performed. Notes that precede a PG/OP/CL serve to amplify the entire procedure.

4. In summary, the following applies:

WARNING

Warns of danger to personnel.

CAUTION

Warns of danger to equipment.

NOTE

Amplifies information or instruction.

Since we will be discussing various handling methods during this chapter, several of the GENERAL safety and maintenance rules that will

Digitized by Google

be applicable to all handling evolutions is contained in the following list:

1. Verify that the surrounding area is clear of personnel/obstructions before operating equipment.
2. Restrict noise and conversation to that required to accomplish the evolution.
3. Do not stand or walk under suspended loads or weapons.
4. Do not load handling equipment above its maximum rated capacity (safe working load). Inspect handling equipment prior to use in accordance with the applicable Maintenance Requirement Card (MRC) and type commander's directives.
5. Do not raise weapons higher, or suspend them longer than necessary.
6. Keep weapons as level as possible when lifting.
7. Do not allow weapons to contact any deck or equipment during lifting.
8. Verify that hooks used to handle weapons have operable safety latches or are moused.
9. Ensure that guide studs on weapons are aligned with the torpedo tube guide slot during tube loading/unloading.
10. Do not allow weapons to be unrestrained, in any direction, unless procedurally directed.
11. Use toxic cleaning agents sparingly and in well-ventilated areas. Vapors of most cleaning agents are toxic if inhaled in large quantities for extended periods. Be sure that cleaning agent containers are kept closed except when in use. Wash hands thoroughly with soap and warm water after using these agents.
12. Use flammable cleaning agents and paints sparingly and only in well-ventilated areas. Ensure no sparks, open flames, or other sources of ignition are present when using these materials.
13. Do not strike or drop high-explosive components. No sparks, open flames, or other sources of ignition are to be present when working with explosives.
14. Observe all precautions for handling explosives. An armed exploder must not be removed from any torpedo. If an exploder is armed, it must be removed by EOD personnel only.
15. Ground yourself immediately prior to touching an electrical connector or wire connected to a weapon. Do so by making bare skin-to-metal contact with the weapon.
16. Inspect all electrical connectors for bent pins and other physical damage. Always engage and disengage electrical connectors by holding the connector, never the wire.
17. Do not connect or disconnect energized electrical connectors unless directed by authorized procedural documentation.
18. To prevent dieseling—the spontaneous combustion of oil or other carbonaceous material with hot, highly compressed air—keep the compression system free of foreign material.
19. Extreme care must be exercised to shut valves and bleed all air from lines and bodies before disconnecting fittings.
20. Exercise extreme care to prevent sharp bends or twists in air charging lines.
21. Do not tighten pipe connections or other parts while they are charged with high-pressure air.
22. Do not remove safety straps or chains from charging lines until the charging valve has been shut and the bleeder valve has been opened.

SAFETY SUMMARY

Most procedural guides (PG), operation procedures (OP), or checklists (CL) will have a SAFETY SUMMARY located in the front of it. The purpose of the safety summary is to ensure that all personnel involved with weapons handling, loading, shipping, employment, and weapon-related emergencies fully understand all WARNINGS, CAUTIONS, and NOTES and the procedures by which these hazards may be reduced or eliminated.

The safety summary is divided into several parts with each part consisting of those safety precautions pertinent to the various evolutions to be performed for a given weapon. **Familiarity with and adherence to the applicable safety standards and safety precautions are mandatory for all personnel**. Specific safety precautions are contained in the PG, OP, and CL as appropriate.

The following safety standards apply to all phases of an operation involving weapons systems. The controls and rules are designed to

Digitized by Google

provide positive measures to accomplish the following:

1. Ensure that a launched weapon, either warshot or exercise, is precluded from striking the firing ship
2. Prevent an inadvertent/accidental launching, arming, or motor start
3. Ensure that the stowage, handling, maintenance, and testing operations of the weapon and weapon system will minimize the risk of injury to personnel

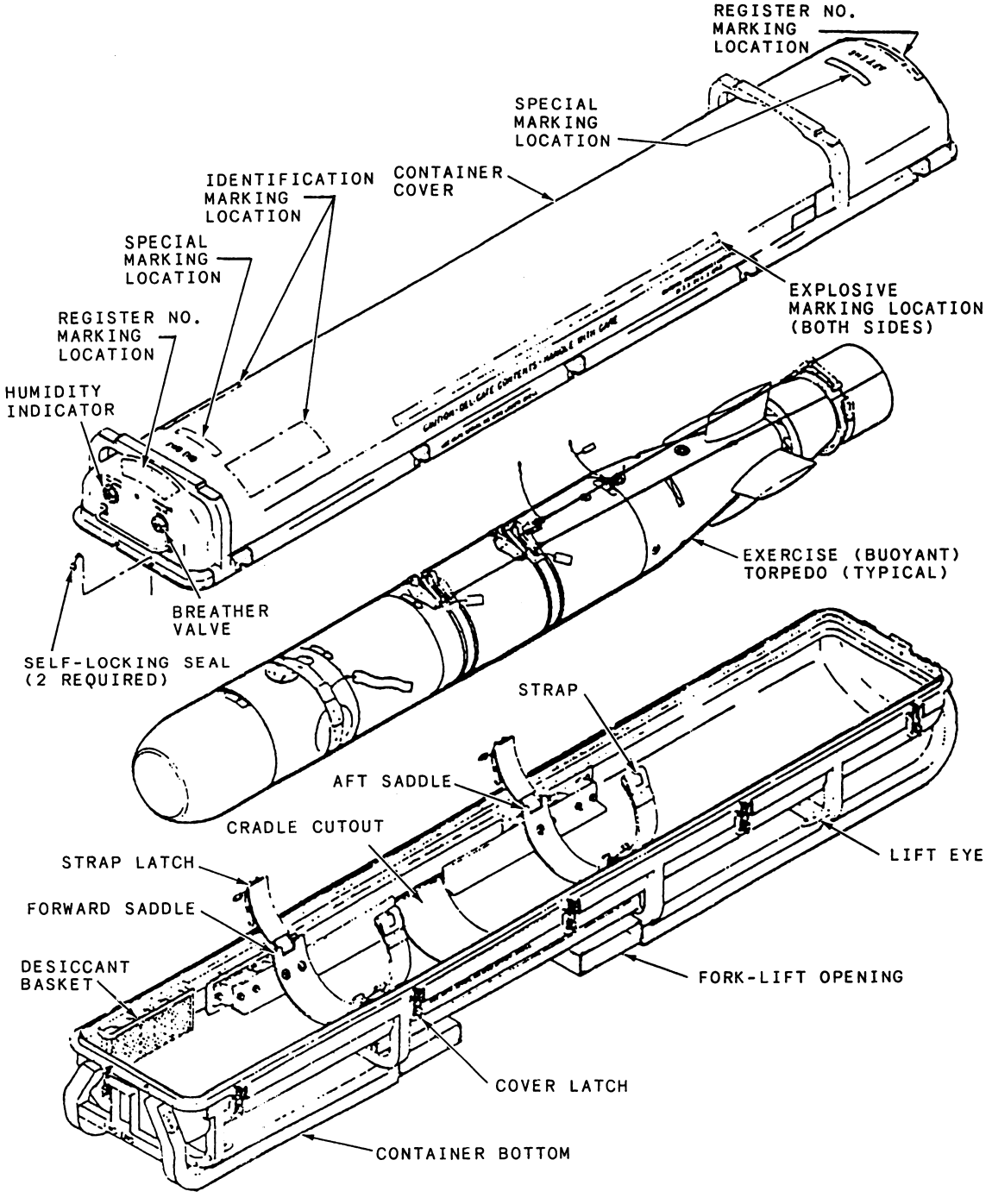

Figure 1-1.—Mk 46 torpedo container Mk 535 Mod 0.

Digitized by Google

4. Strive to minimize the probability of an explosion of weapons involved in accidents, incidents, or during jettison

SHIPPING

Torpedoes, missiles, and some of their components are shipped in specially constructed airtight containers. These containers are designed to protect the torpedo or component from damage during shipment and handling. When not in use, the containers should be stowed in a place where they will be protected from the weather so they can have future use. If a container is found damaged and there is a possibility that it might not withstand rough treatment during shipment, the container should not be used.

When you are preparing the container for shipment, it is placed horizontally in an upright position, on a flat surface, in an uncongested area where all sides are accessible. Large containers are lifted with slings attached to an overhead lifting device or with a forklift, using the lift guides located in the bottom of the container. Containers must be handled carefully to prevent damage to either the container or its contents. Additionally, **prevention of injury to personnel is forever paramount.**

This may be a good time for us to show you some of the various weapons and missile containers that you will be packing, unpacking, and stowing. The shipping container for the Mk 46 torpedo is the Mk 535 Mod 0 (fig. 1-1), while the Mk 48 torpedo uses a Mk 481 Mod 1 container (fig. 1-2). The antisubmarine rocket (ASROC) uses several different containers, one of which is

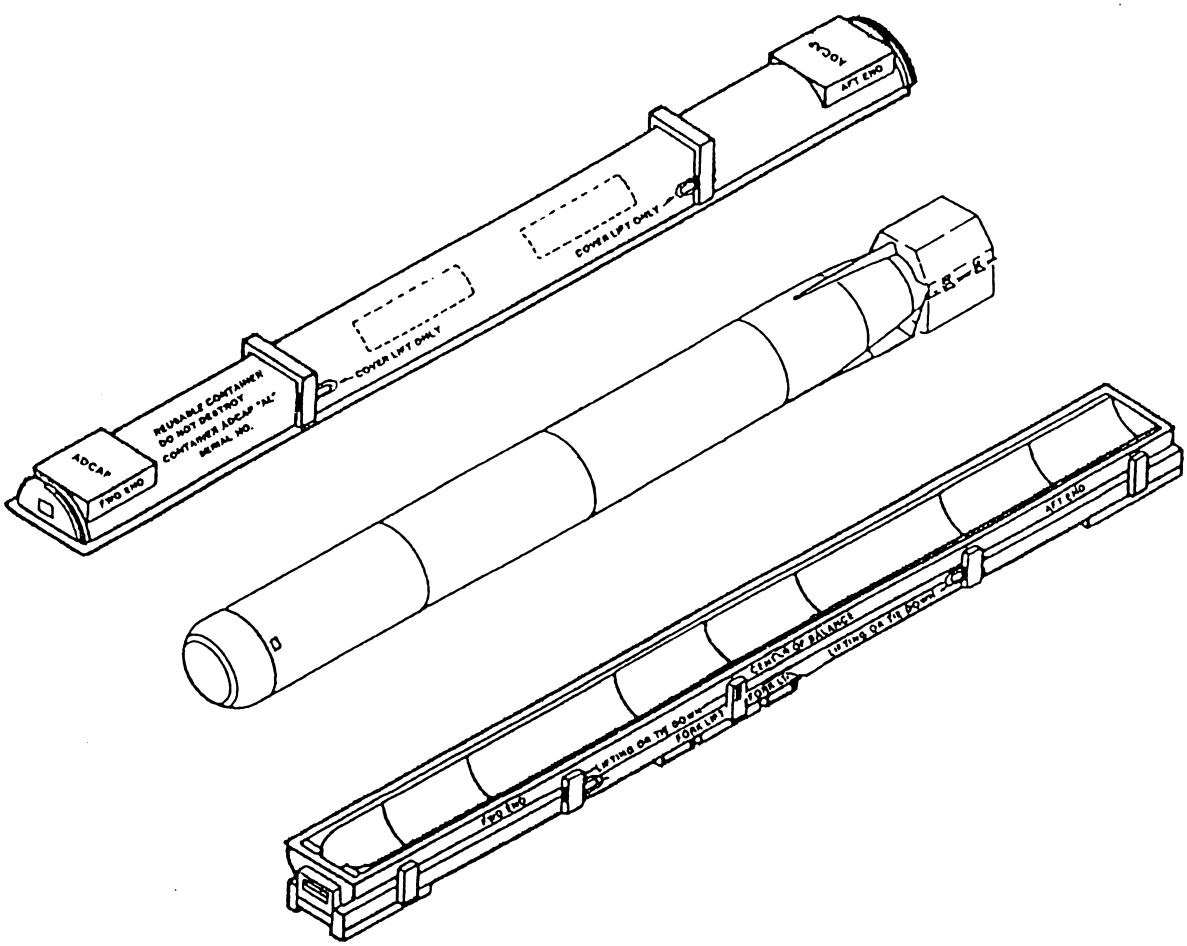

Figure 1-2.—Mk 48 torpedo shipping container Mk 481 Mod 1.

Digitized by Google

the Mk 183 Mod 1 (fig. 1-3) for the missile; the Mk 178 (fig. 1-4) is for the rocket motor Mk 37, and the missile airframe container Mk 321 (fig. 1-5). The Tomahawk All-up-Round (AUR) container (fig. 1-6) is the CNU-308/E, and the container for the Harpoon (fig. 1-7) is the Mk 630 Mod 0.

Canning and uncanning procedures will be discussed in general, because as you know each weapon and missile has a specific ordnance publication with detailed canning and uncanning procedures that apply to that specific weapon or missile.

Rather than providing instruction on both canning and uncanning procedures, we will provide you an example only of a canning procedure since the uncanning procedure is very similar in that it is a reversal of the canning procedural steps.

Let's start with an empty, reusable container. First it must be removed from stowage and placed in an uncongested area. Then you need to equalize

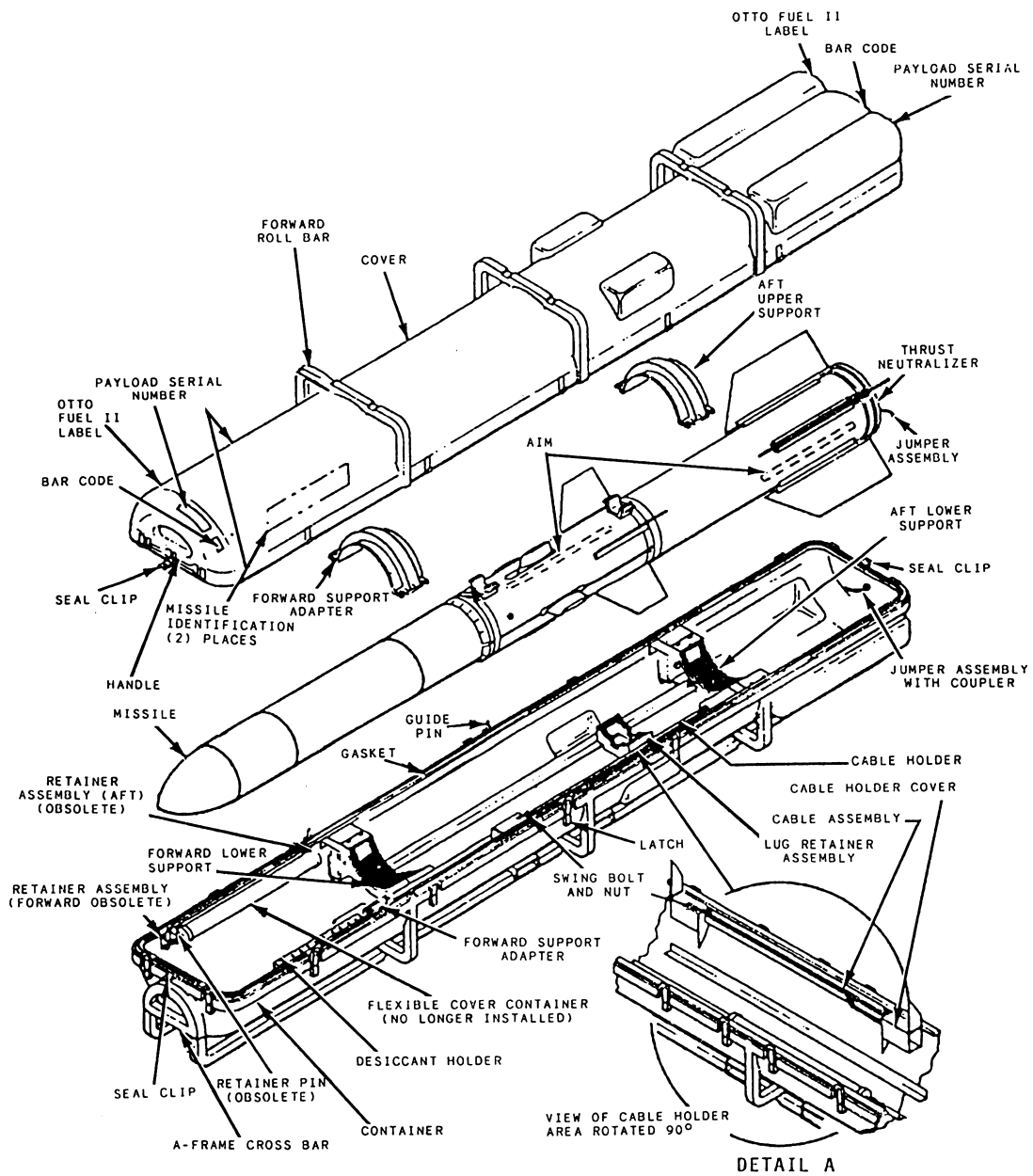

Figure 1-3.—ASROC container.

Digitized by Google

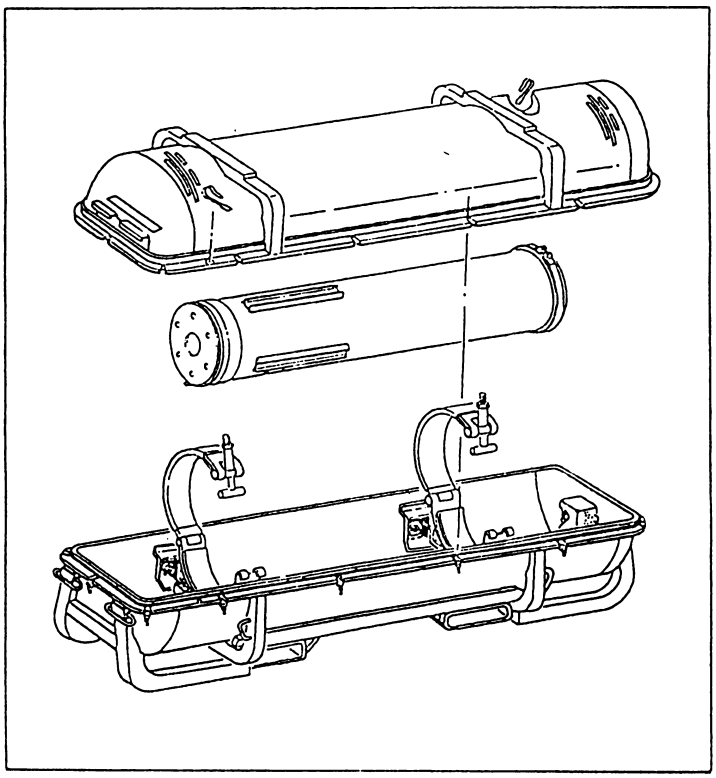

Figure 1-4.—Rocket motor Mk 37 container Mk 178.

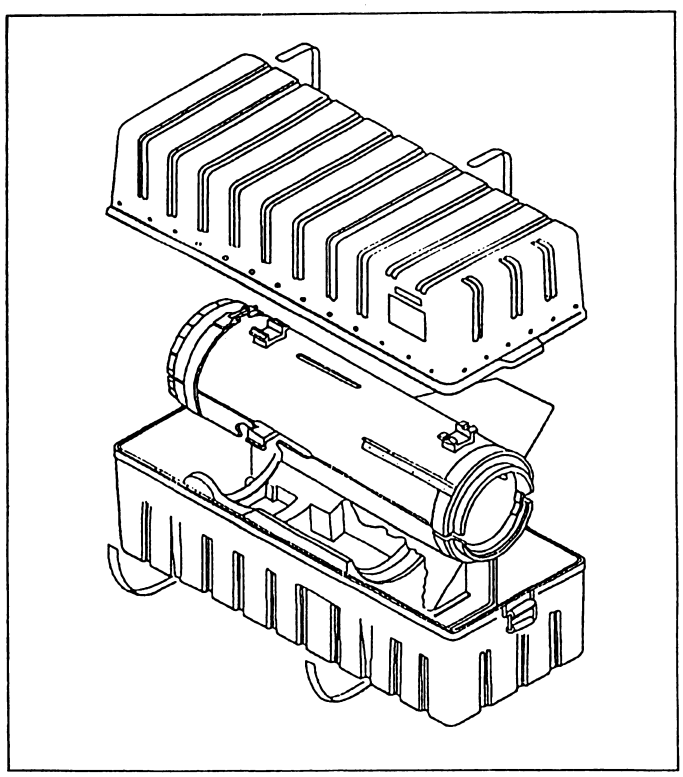

Figure 1-5.—Container for missile air frame.

Digitized by Google

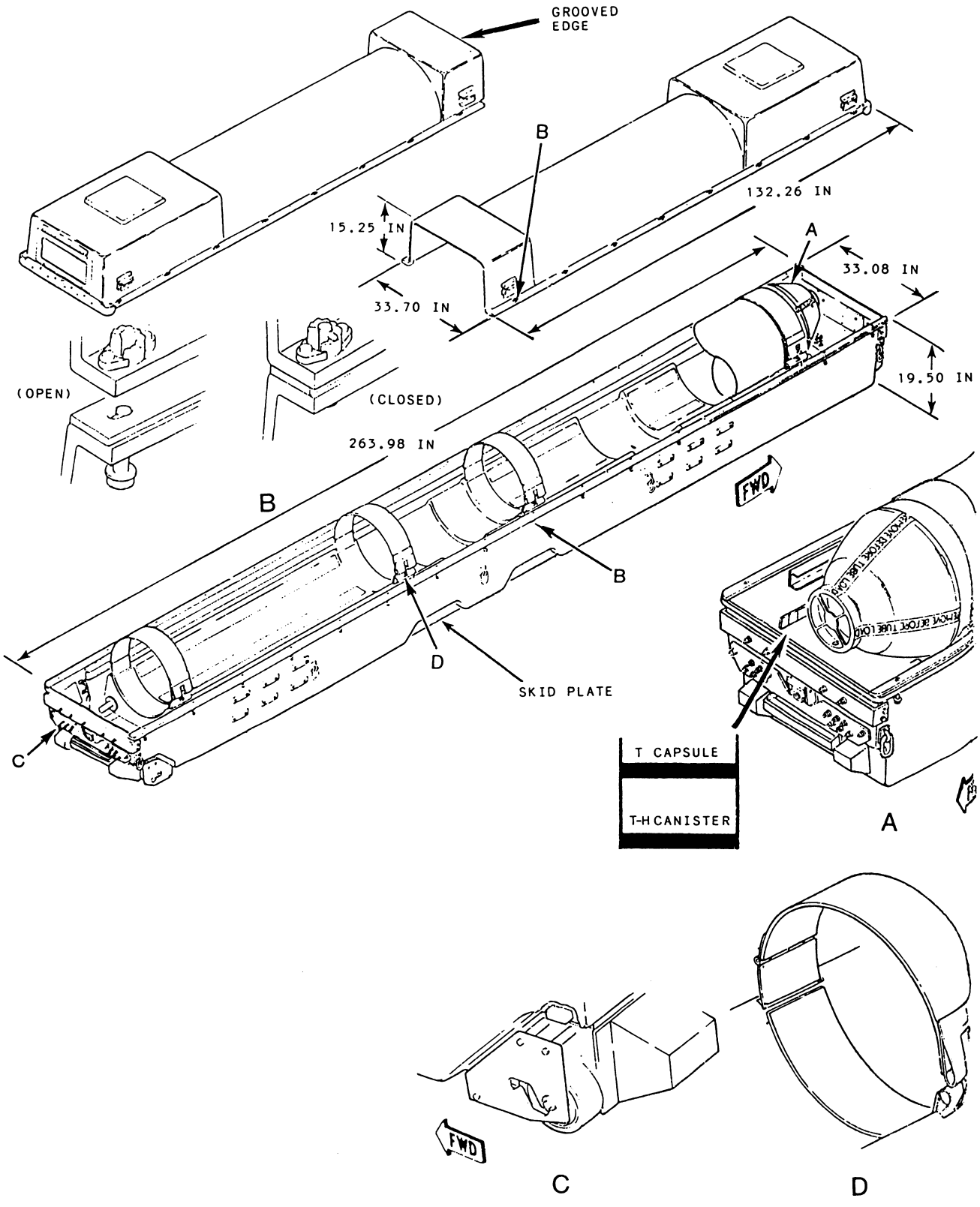

Figure 1-6.—Tomahawk AUR Shipping Container CNU-308/E.

Digitized by Google

CONTAINER DATA:

NUMBER OF MISSILES PER CONTAINER	1
LENGTH	271.88 IN.
WIDTH	44.00 IN.
HEIGHT	39.25 IN.
STACKING HEIGHT	36.25 IN.
NET WEIGHT	1437 LBS.
GROSS WEIGHT	3667 LBS.
SHIPPING CUBE	272 CUBIC FEET

A. CONTAINER MK 630 MOD 0 (CLOSED)

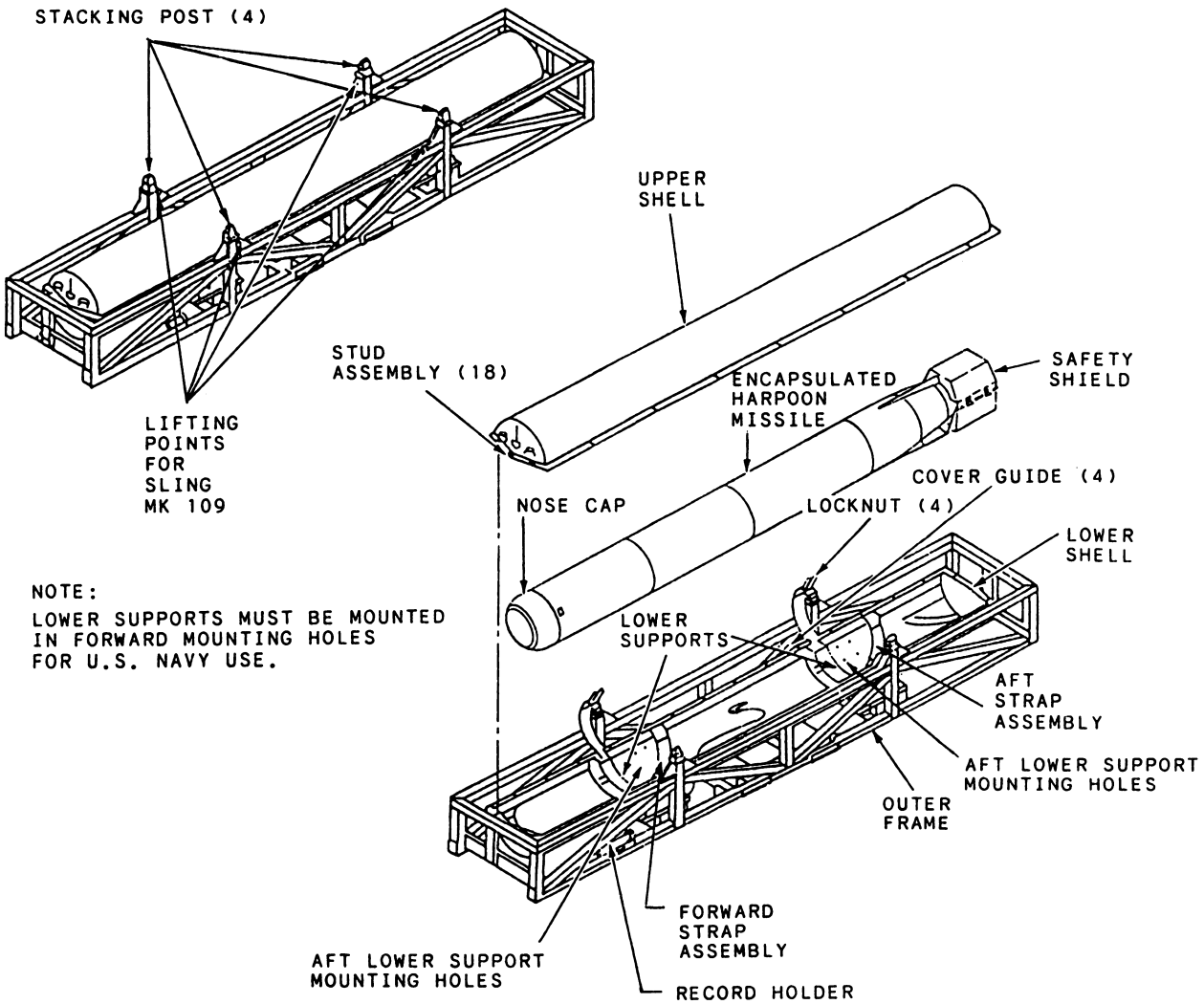

B. CONTAINER MK 630 0 (OPENED)

Figure 1-7.—Encapsulated Harpoon missile shipping container.

Digitized by Google

any internal pressure that might have built up in the container by pressing the BREATHER VALVE on the end of the container. Having completed this check, you need to release the latches while holding the cover. Once the latches are free, remove the top from the container. Release all strap latches and open the saddle straps if installed. Next you should inspect the container and contents for damage. The next step will be to inspect for foreign material, such as tools, rags or old paperwork; and if any is found, it should be removed. Spray the latches with a corrosion preventative. Then place the desiccant, if required, into the container. Normally, within the procedure's CAUTIONS, safety guidelines will be outlined for lifting the weapon. Next, remove the protective nose cover and any plastic wrap on the weapon. Lift the weapon high enough so that it can be lowered into the container. Once secure, place the protective materials in the container with the weapon. Secure the strap latches and torque them as per applicable guidelines. After closing the container, you will seal it with self-locking seals and record the numbers of the seals on the shipping document or a DOD Single Line Item Requisition System Document, DD Form 1348.

The effects of the environment on a weapon should be a major concern for you. One method you have of checking on the environmental status is with the use of humidity indicators. They should indicate 40 percent or less, within 4 to 12 hours after closing the container. When required you will use activated desiccant to maintain an unacceptable humidity level.

The built-in type humidity indicator is normally the four-spot plug type (fig. 1-8); the spots show the numbers 20, 30, 40, and 50. All spots are blue when the desiccant is fresh. The number on each spot shows the percentage of relative humidity that has been reached when that dot turns pink. For example, when the 30 spot turns pink, you would interpret this to mean 30 percent relative humidity has been reached within the container. Additionally it means the desiccant should be replaced. When you open a container to inspect the contents and find evidence of condensation, rust, corrosion, and fungus damage exist as a result of excessive humidity, this must be reported and the contents repackaged and returned to the issuing activity.

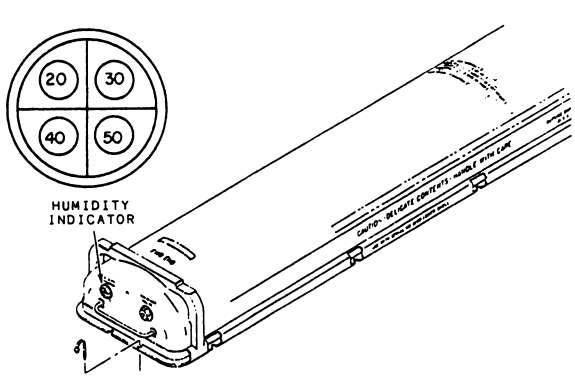

Figure 1-8.—Humidity indicator.

Also, you need to ensure that external markings on the containers reflect the correct register number, drawing number, NSN, DOD code, federal item name, explosive content, DOT(ICC), as required by applicable documents such as 1348s.

One of the jobs you will be required to perform is to verify the condition of both the container and the weapon.

Prior to unpacking the container, you should inspect for evidence of improper handling—punctures, dents, and broken self-locking seals. Components received in damaged containers or in containers indicating improper preservation shall be closely inspected for damage.

Having completed an inspection of the container, you need now to perform a preliminary visual inspection of the torpedo's exterior for evidence of damage from the environment: heat, hydraulic fluid leakage, seawater, or mishandling.

The following is an example of accept/reject terminology for damaged torpedo components and unpainted surfaces. This example is provided to assist you in determining whether or not damage has occurred to the torpedo and if such damage is acceptable or is cause for rejection.

ABRASION—A surface usually caused by friction, grinding, or rubbed-away portion of parent metal.

CHIPS—Small, loose metallic particles detached from parent metal surfaces.

CRACK—A line of breaking or splitting in a continuous surface. Sometimes with and sometimes without visible separation of metal, and usually appearing as a jagged line or fissure.

Digitized by Google

CORROSION—Deterioration of an unprotected metal surface by chemical reaction. Normally evident as pitting or as general roughening and decay of a surface area. Rust is the term used to describe the corrosion of iron and steel.

DENT—A surface depression having a smooth rounded contour and smooth rim. Involves no removal of material resulting in a change of thickness in metal.

GOUGE—An excessive groove or cavity which removes material and is indicated by exposure of bare metal or metal oxides. Surface depression of irregular shape and depth, usually rough contoured, having a jagged, protruding rim.

NICK—An abrupt depression with sharp vee bottom and sharp, sometimes raised edges or corners.

PIT—A small crater-like surface depression, rough-textured, and usually dark grayish in color. Often appears in groups and usually associated with corrosion.

PROTRUSION—Metal raised above normal contour or surrounding surface. Usually associated with edges of nicks, gouges, and scratches.

ROUGH—An uneven or bumpy surface marked by inequalities, ridges, or projections on metal surface.

SCRATCH—A furrow plowed in a metal surface. Can result from machining operations, handling, or in-service operation.

SLIT—A long, narrow cut or opening with visible separation of metal.

HANDLING

Now, let's discuss a subject that is a very big part of your day or if not, it soon will be—HANDLING. As a third class you were involved in numerous handling evolutions as a worker or team member. I'm sure you were trained for your specific area or zone of responsibility, but with promotion comes new and added responsibilities. Two of which will be directing and supervising of a handling evolutions.

HANDLING EQUIPMENT

To cover this effectively, first we should define the term "HANDLING EQUIPMENT." Handling equipment, as used in this TRAMAN, includes all equipment used to transfer or transport explosive-loaded or inert ammunition items, including those used for training or practice.

You must ensure observance of the following precautions when using weapons handling equipment to reduce the likelihood of an explosive incident or accident:

—Only approved handling equipment shall be used for operations involving weapons, ammunition, and explosives. Approved handling equipment is described in NAVSEA OPs 2173 and 4098.

—Handling equipment shall not be used unless it is known to be adequate and in safe condition. Never use handling equipment to carry loads greater than its safe working load. The safe working load of the explosives handling equipment should appear on the equipment at a place visible to the operator at all times.

—No modification of handling equipment shall be made without the prior approval of NAVSEASYSCOM, NAVAIRSYSCOM or DIRSSP.

—Handling equipment for which periodic safe working load tests are not current shall not be used.

—Personnel shall stand clear of both moving and suspended loads. Loose clothing that could become entangled in operating equipment shall not be worn.

Digitized by Google

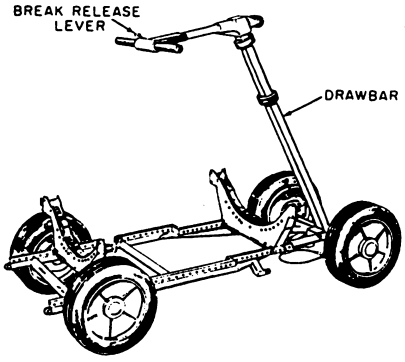

Figure 1-9.—Weapons skid AERO-21C.

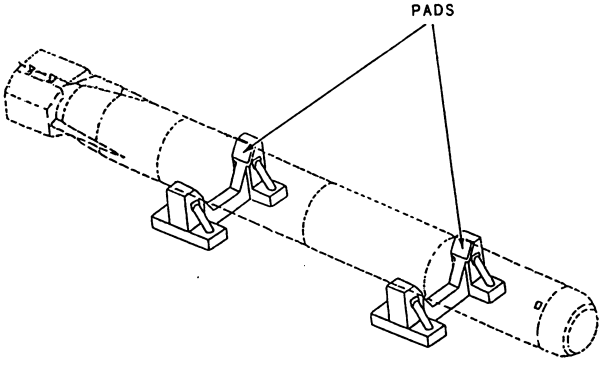

Figure 1-10.—Deck chock.

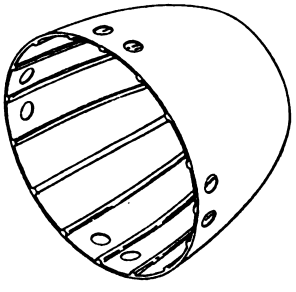

Figure 1-11.—Nose cover for the Mk 46 torpedo.

—Instruct personnel in the hazards of radio frequency (rf) radiation burns, such as those that may be inflicted from booms, crane hooks, etc., during loading/offloading operations.

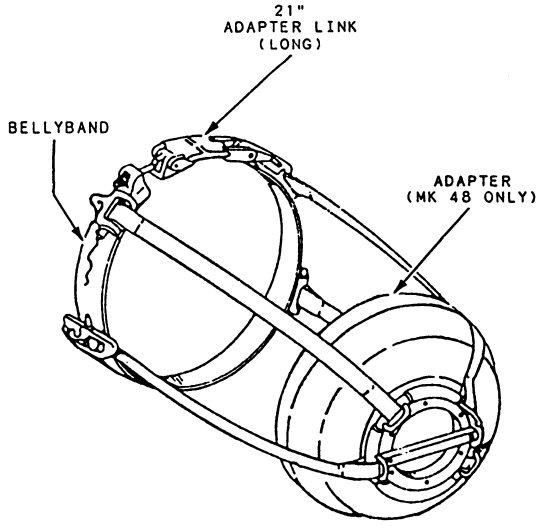

Figure 1-12.—Universal nosepiece for shipping 21-inch diameter weapons.

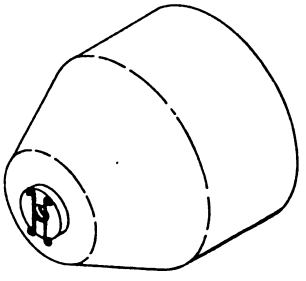

Figure 1-13.—Propeller guard for the Mk 46.

—Personnel will be qualified and certified under the provisions of OPNAVINST 8023.2 and other applicable command directives.

—An instruction chart showing all operating features, the functions of the equipment, and all safety precautions shall be mounted on the machinery or equipment they serve, or on an adjacent structure provided they can be easily read from an advantageous position or operation station; e.g., elevators, cranes, dredger hoists, etc.

—Tag lines shall be used to guide lifts if there is a possibility of the load moving out of control. Tag lines shall be of adequate length and kept free of loops and knots.

Digitized by Google

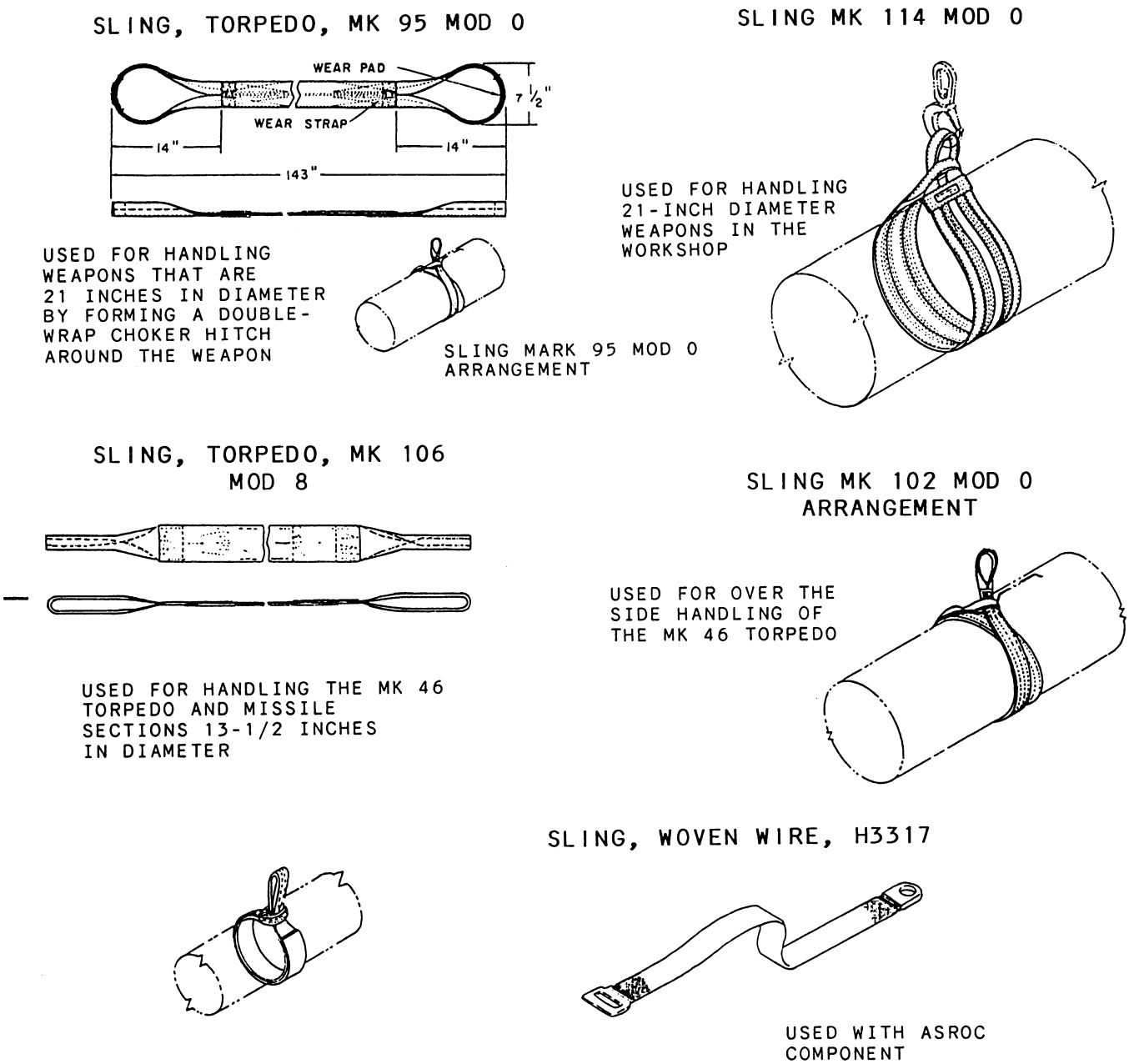

Figure 1-14.—Slings.

—Equipment that is subject to periodic testing and which has been repaired, modified and/or altered shall be retested before use.

Handling equipment includes but is not limited to the weapons or AERO skid (fig. 1-9) for moving torpedoes, various other weapons and equipment; deck chocks (fig. 1-10) for temporarily stowing torpedoes or other weapons; nosecovers (fig. 1-11) or nose pieces (fig. 1-12), propeller guards (fig. 1-13), slings (figs. 1-14 and 1-15), and taglines (fig. 1-16). These are just a few pieces of the handling equipment you will use in the performance of your duty as a member of a handling team. It is very important for you to remember that each weapon has its own unique handling gear. Prior to starting a handling evolution, you should consult the applicable OPs to ensure that all the equipment needed to properly handle and stow the weapons is on board.

Some of the equipment used frequently for lifting and transferring weapons from one

Digitized by Google

SLING, WEAPONS HANDLING,
MK 99 MOD 0

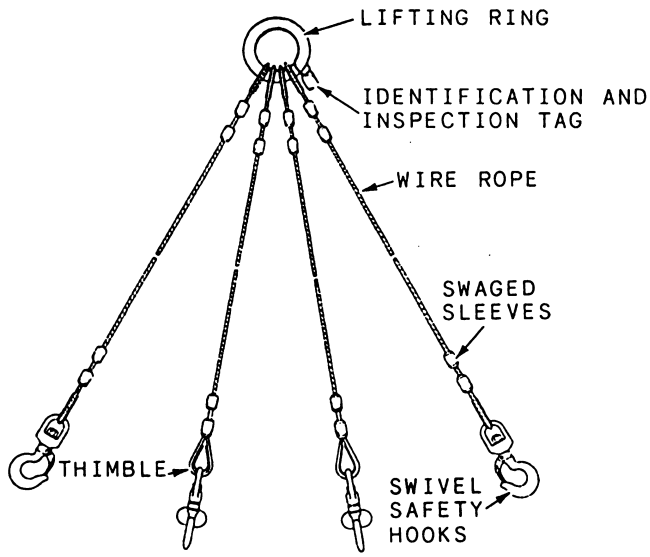

SLING, CONTAINER, MK 116
MOD 0

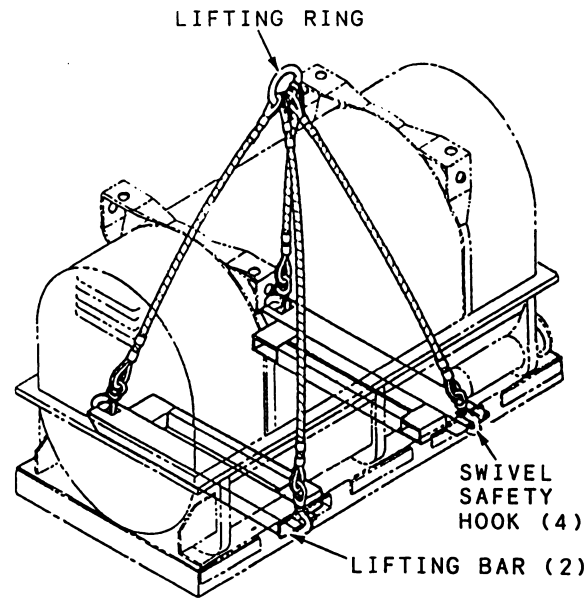

SLING, CONTAINER LIFTING,
MK 109 MOD 0

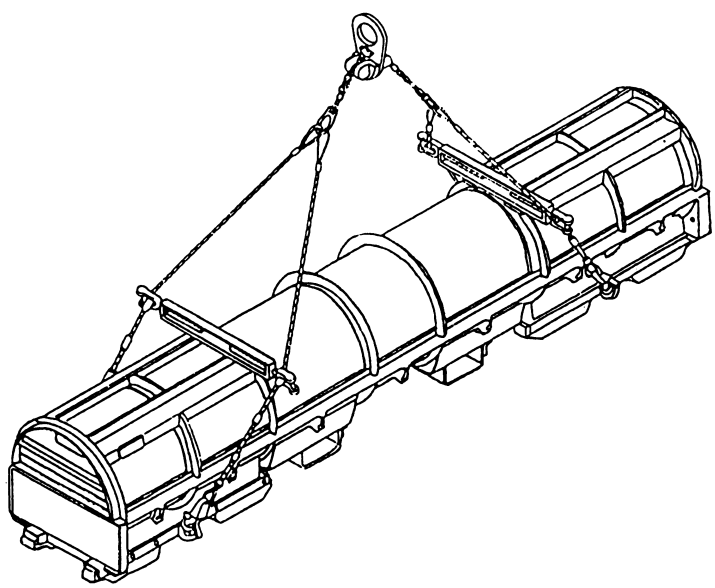

Figure 1-15.—Slings for lifting containers.

Digitized by Google

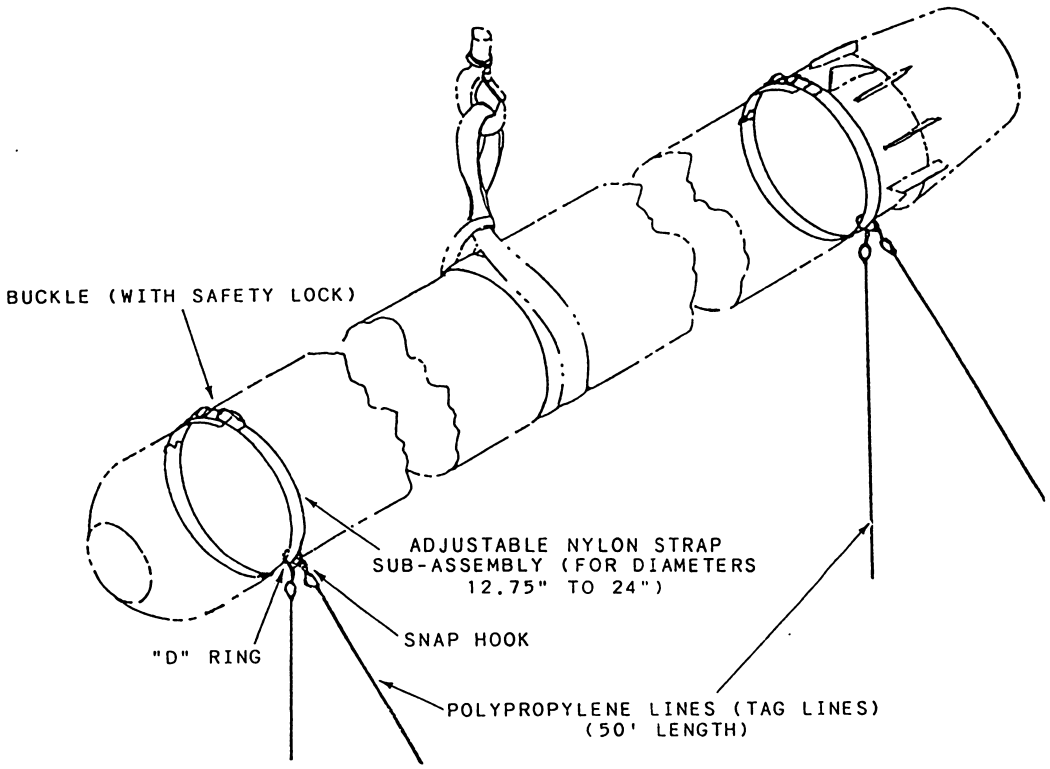

Figure 1-16.—Tagline Mk 1 Mod 0.

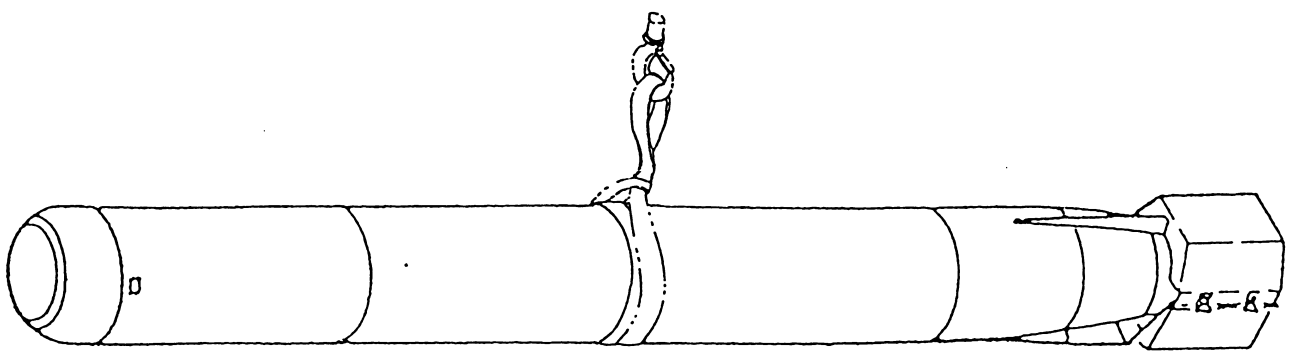

Figure 1-17.—Center of gravity.

location to another includes hoists, elevators, traveling cranes, floating cranes, torpedo-handling carrier cranes, forklifts, and handtrucks.

HANDLING OPERATIONS

Now let's take that torpedo or weapon out of that shipping container and load it aboard a ship for storage or further transfer to a ship or submarine. Remember, as we discuss this, we are talking in generality, because each ship or weapons station has its own specific guidelines.

Before an attempt is made to lift a torpedo or weapon, the sling must be located around the weapon at the center of gravity (fig. 1-17). The center of gravity on the exact position of the balance on a torpedo depends on the amount of fuel and/or water in the tanks, and whether or not it is fitted with a warhead or an exercise head.

Digitized by Google

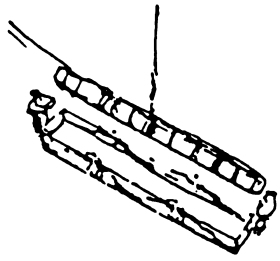

1. RAISING WEAPON OUT OF CONTAINER

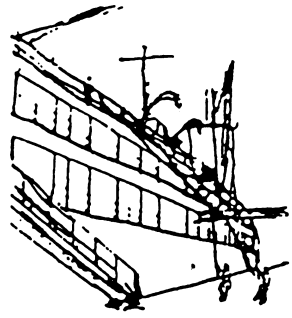

2. RAISING WEAPON TO SHIP'S DECK

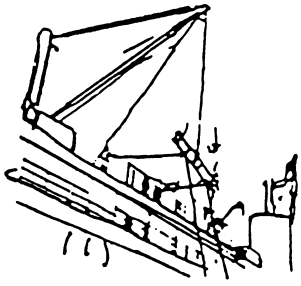

3. CLEARING DECK LEVEL RAIL

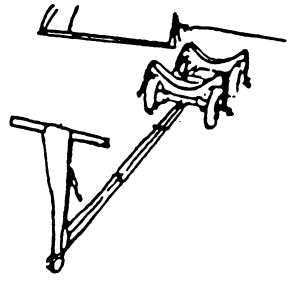

4. AEROSKID READIED

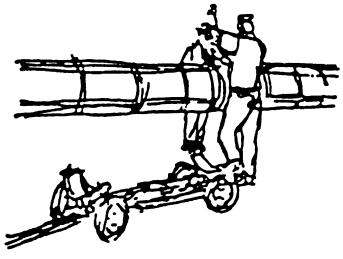

5. LOWERING WEAPON ONTO AEROSKID

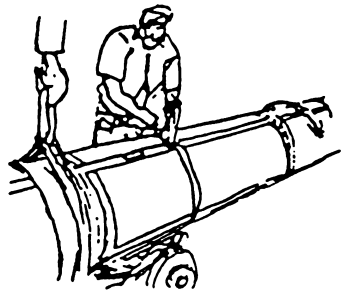

6. SECURING AEROSKID LASHING STRAPS

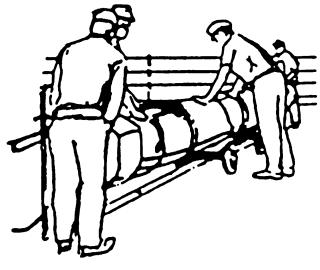

7. WEAPON ON AEROSKID

Figure 1-18.—Loading from dockside to the ship's deck.

The propeller guard and nosepiece must be installed—the nosepiece protects the transducer; the propeller guard, in turn, protects the propeller blades and prevents injury to personnel. Tag lines shall be installed to enable your handlers to control the motion of the torpedo while it is suspended.

LOADING

The next step will be to load the weapon onto the weapon's deck of the ship (fig. 1-18) placing it on a waiting AERO-skid. From here it will be moved via the mess decks to the weapons workshop or storage area onboard the ship,

Digitized by Google

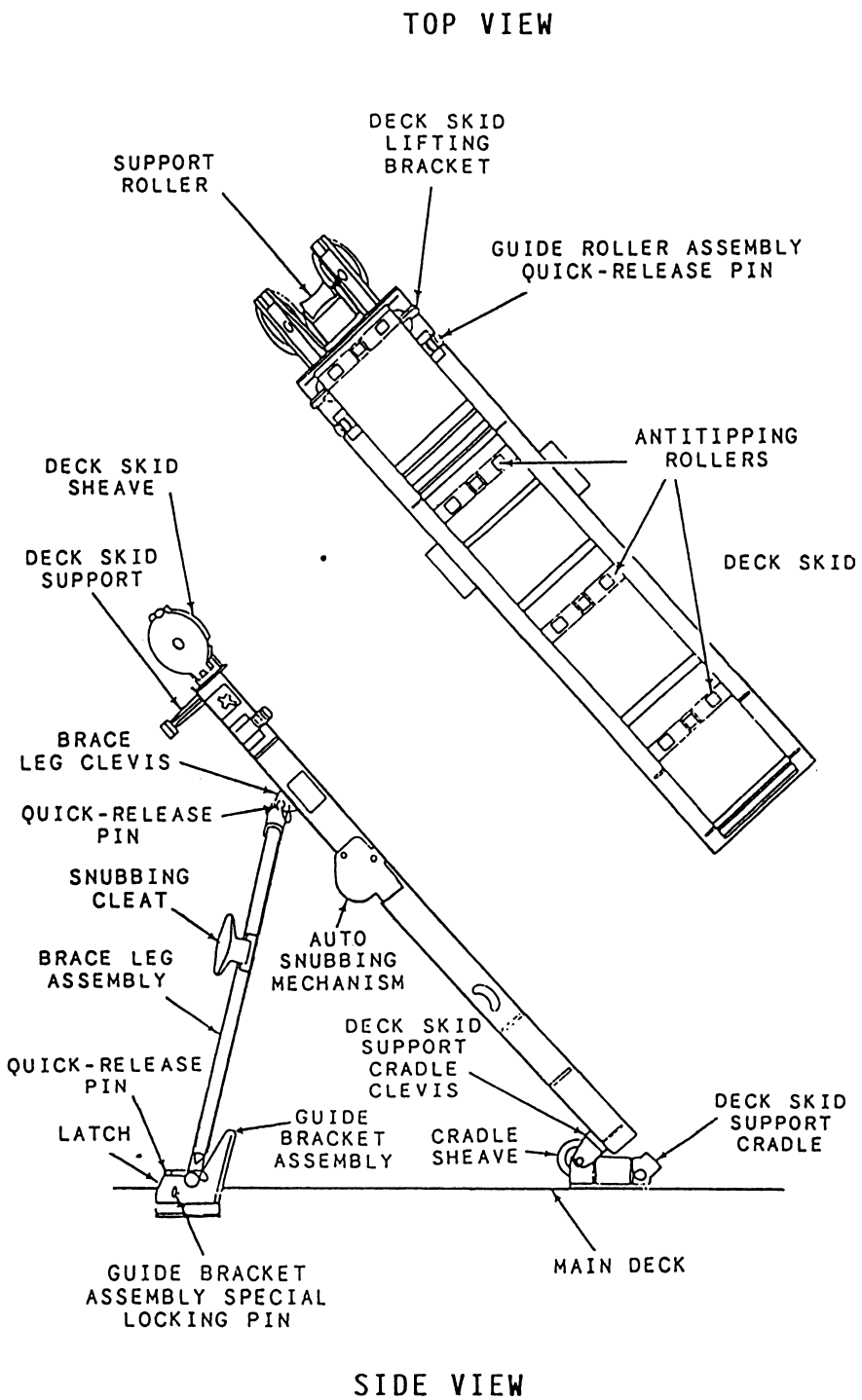

Figure 1-19.—Deck skid.

or to the deck of a submarine. Once at its destination, the weapon will be secured to a deck skid (fig. 1-19) and aligned with the shipping hatch. If the weapon were stowed or placed on the ship for maintenance, you would just reverse the procedures to off-load it to the dock.

The loading of a weapon on a submarine is somewhat different than that of loading it on a surface ship; the first difference is the weapon will be lifted to the deck and secured on deck skids. From here, it is aligned with the shipping hatch. The weapon is then transferred from topside to

Digitized by Google

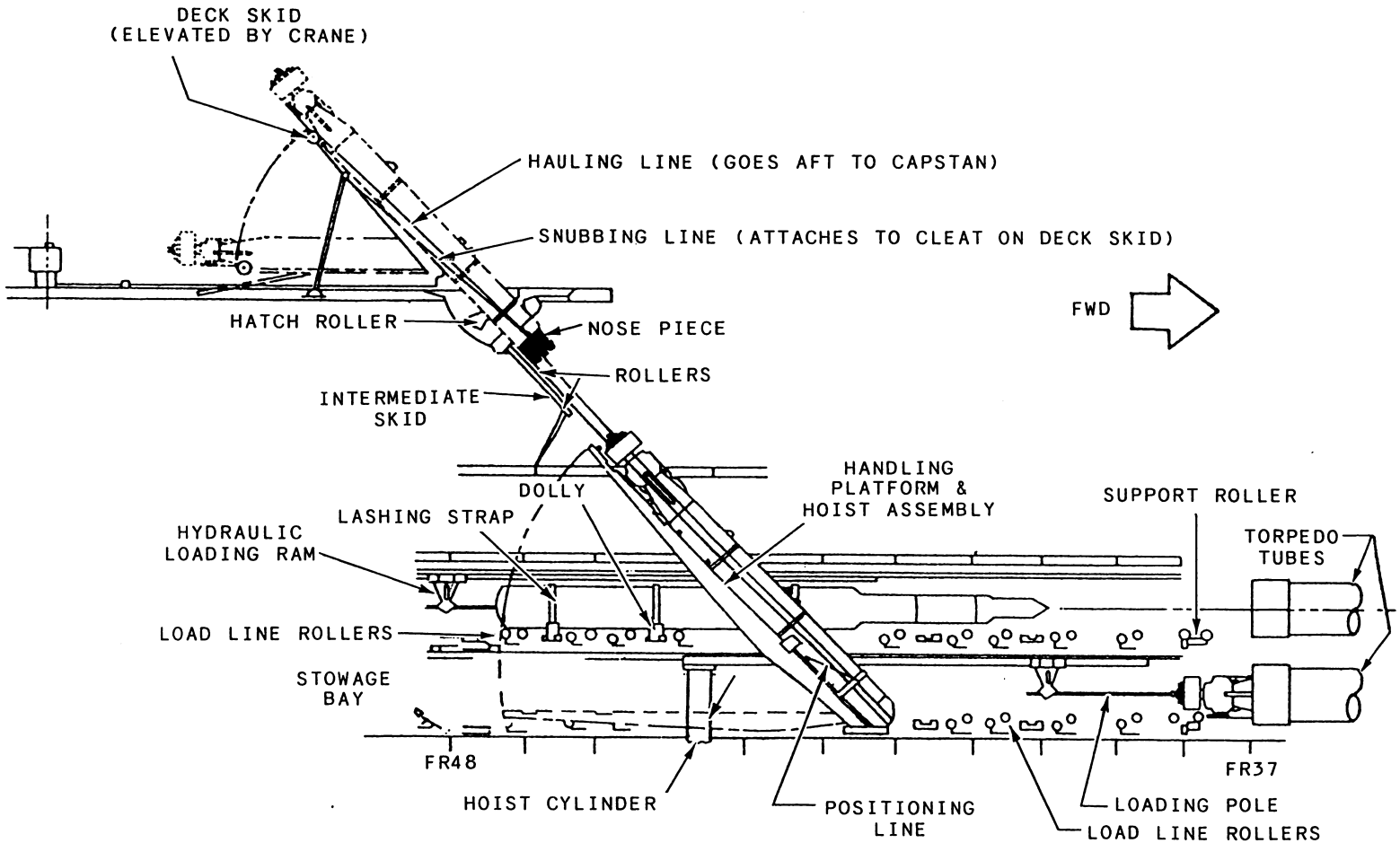

Figure 1-20.—SSN 637-class torpedo room.

Digitized by Google

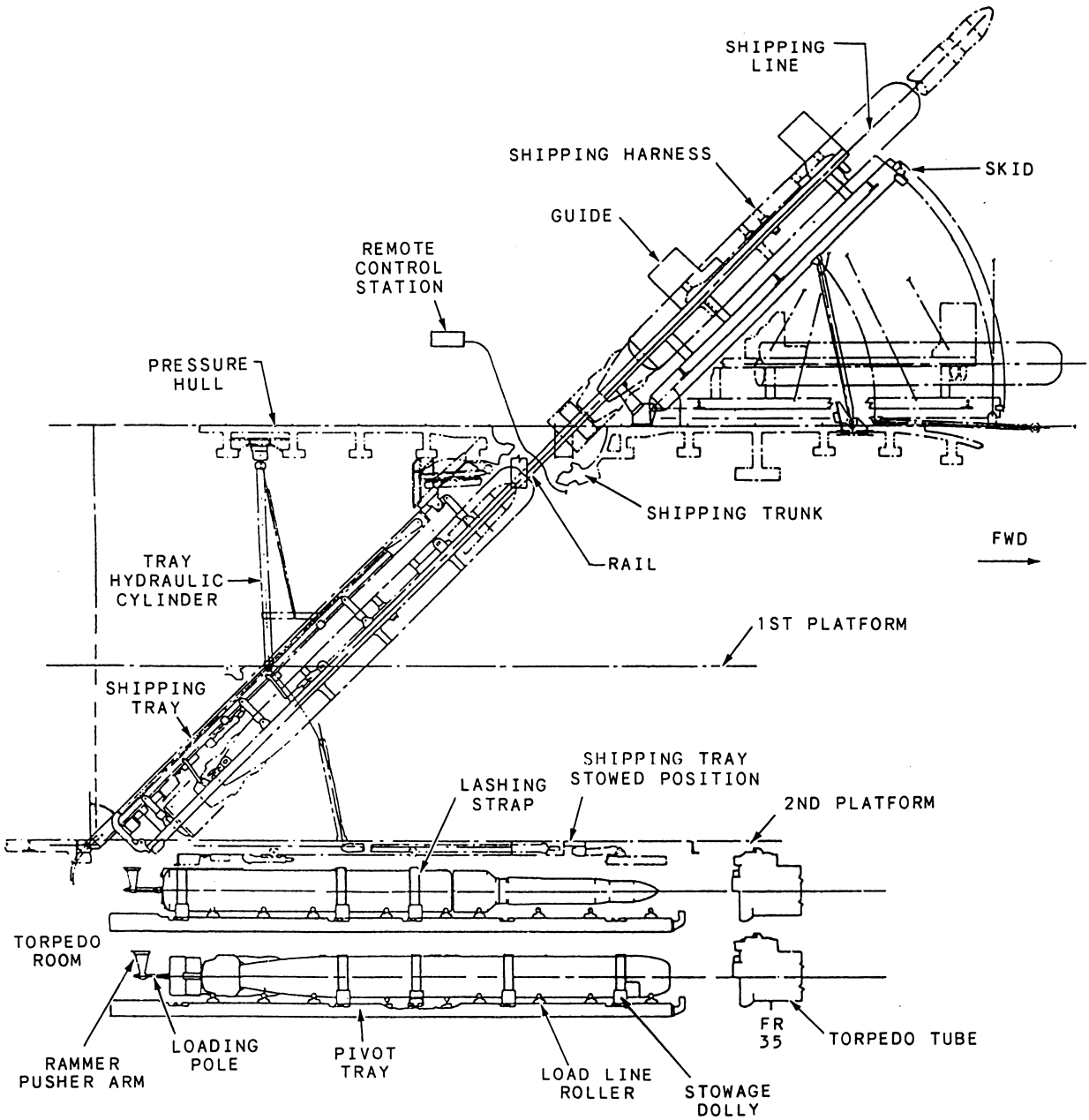

Figure 1-21.—SSN 688-class torpedo room.

the torpedo room (fig. 1-20 or fig. 1-21), where it will be secured. It is rotated from either an inclined or vertical attitude to a horizontal position, where it is secured to support equipment with lashing straps. It is then transferred to a stowage location on either the upper or lower stowage level and locked in a stowline until the weapon is loaded into a tube. It is either pushed into the torpedo tube with a manual or power ramming device or pulled into the torpedo tube using equipment similar to a block and tackle. In some cases this equipment is referred to as emergency handling gear. The weapon is restrained at all times and supported to ensure personnel safety and weapon protection.

On a surface ship such as a destroyer, the torpedo-handling system (THS) is installed in the port and starboard torpedo rooms. The system consist of a bridge crane and stowage chocks and is used to transfer a Mk 46 from its container,

Digitized by Google

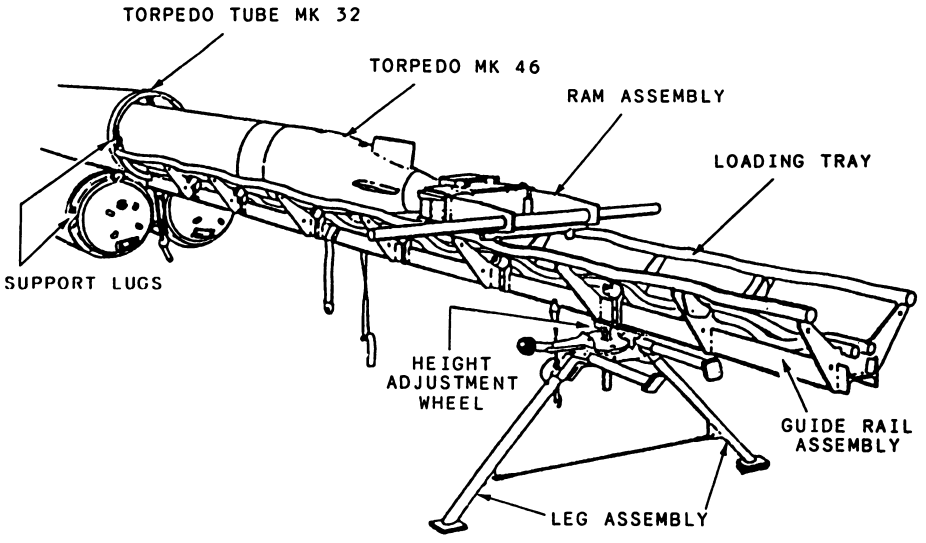

Figure 1-22.—Torpedo loading tray Mk 2.

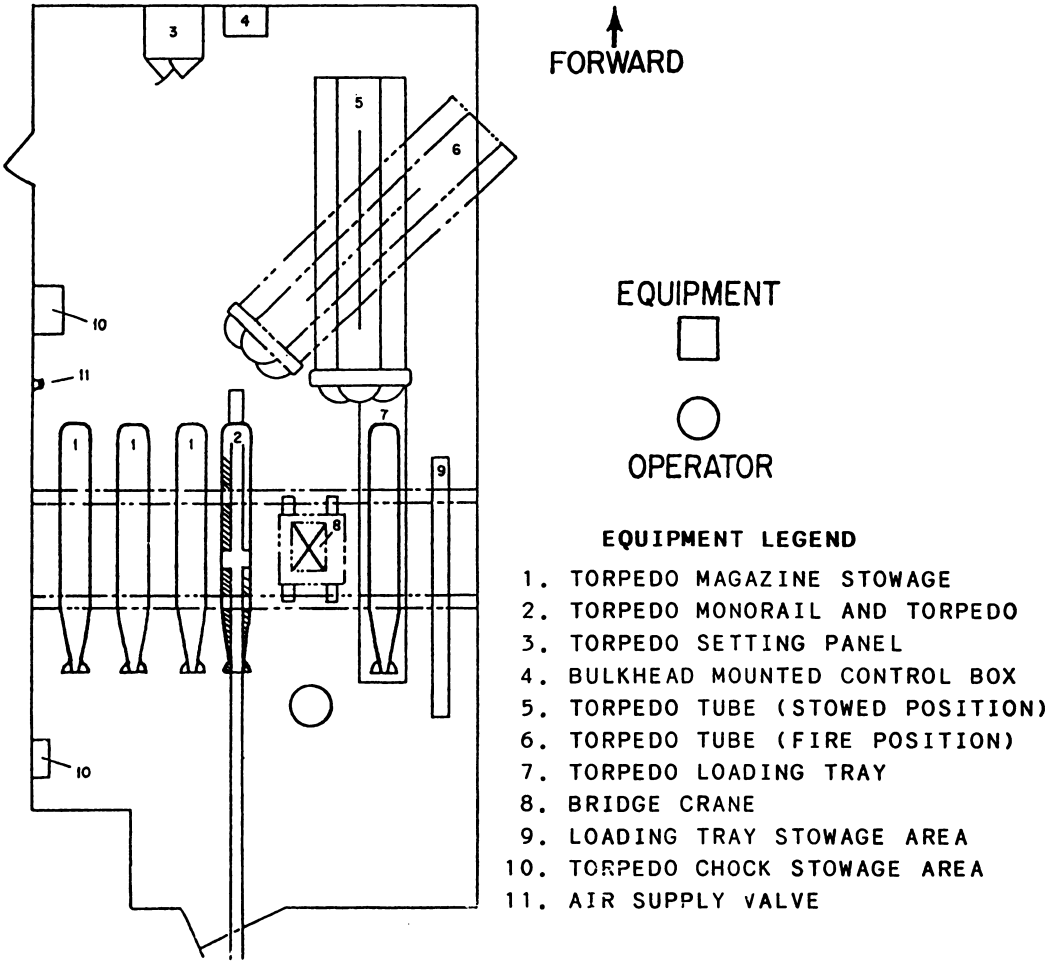

Figure 1-23.—Starboard torpedo room layout.

Digitized by Google

dolly, or an AERO skid to stowage or to the loading tray (fig. 1-22). Figure 1-23 shows the location of the THS components and other equipment in the starboard torpedo room.

Probably the two pieces of equipment you will use the most are elevators and hoist (fig. 1-24). As a supervisor there are additional safety concerns when using these two pieces of equipment. First and possibly most importantly, only

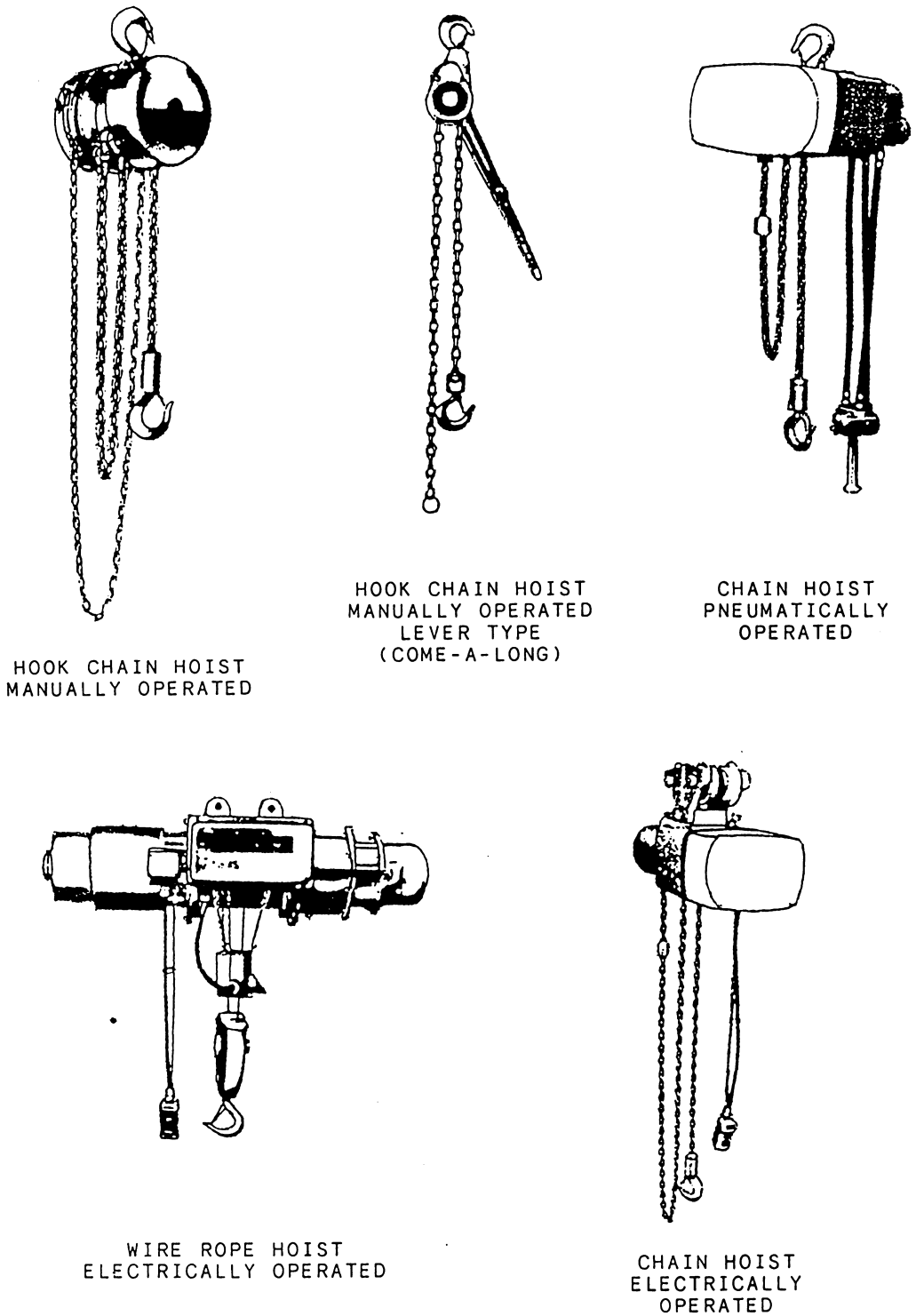

Figure 1-24.—Hoist and trolleys.

Digitized by Google

trained and qualified personnel shall be permitted to operate weapons elevators and hoist. (You must ensure that they are familiar with the emergency devices, their functions, and how to operate and maintain them.) The elevators and hoist must be examined at least once a week or after each use for loosened or damaged parts. Corrective maintenance should be a follow-on to these inspections so that they will be ready for use at all times. Your operators must keep their hands clear of motor operated doors. Elevators and hoist designated for ammunition only shall be used for that purpose alone; they are not to be operated if any safety devices/interlocks are inactivated or defective. Maintenance and testing of elevators and hoist should be performed in accordance with *Shipboard Ammunition Handling and Stowage*, NAVSHIPS S9086-XG-\STM-000, chapter 700. As you will find when reading this manual, the maintenance and testing of elevators is a subject in itself.

To ensure maximum safety and efficient operation, equipment used for lifting weapons components or explosives must be periodically weight tested. So, lets move on to our next area of discussion "weight test" of handling equipment.

WEIGHT TEST

It is not only important to use the correct handling equipment but you must also ensure that the equipment you use has been periodically inspected and tested to assure safe and reliable operation. Assure the personnel performing the inspections and test are thoroughly familiar with the equipment and its function. Also, any required equipment repairs and adjustments shall be made before the inspection and testing. Repairs or adjustments deemed necessary during any inspection or testing phase shall be completed and the previous inspection and testing shall be repeated before the next phase is begun. Handling equipment that has been repaired or modified must be retested before use. Testing following repair or modification shall include load testing sufficient to demonstrate that the repair and modification work were properly performed. If cracking or deformation of load bearing parts, strength welds, or repair areas are sighted during visual inspection, Nondestructive Testing (NDT), such as magnetic particle test, should be conducted.

NO-LOAD TEST

Scheduling a **NO-LOAD TEST** annually on all powered (includes hand-operated) handling equipment, except forklift and pallet trucks, is a major part of ensuring a safe environment for weapons handling. No-load test are conducted to determine if the equipment is capable of safe operation for all its functional modes. During the performance of this test, the equipment is required to function through its full operating ranges and directions.

Cranes, hoist, conveyor, and dumbwaiter must be raised and lowered through their full range of travel at their rated speed for three complete cycles. Bridge cranes and hoist trolleys should be operated through their full limits of travel at their rated speed for three complete cycles (one cycle only for manual drive). Equipment with unusual operating features or modes should be operated sufficiently to demonstrate proper operation of those features and modes. During the test, all travel-limiting devices, such as switches, valves, and mechanical stops, should be operated a sufficient number of times to demonstrate proper operation. All safety devices shall be tested and inspected separately for proper operation.

Some guidance for component inspection during operating test are as follows:

—Check operating limit switches during the last portion of the operating cycle; operate each motion at slow speed to actuate the limit switches to stop over travel. Actuate all emergency switches.

—Check for delay, overheating, and restriction in brake operation. Check for smooth application and proper stopping.

—Look for evidence of binding, warping, permanent deformation, cracking, or malfunction of structural and operating components.

—Check for abnormal noise or vibration and overheating in machinery drive components.

—Check wire rope sheaves, drum spooling, wire rope fastenings, and terminal hardware for proper operations, freedom of movement, no unusual noise or vibration, and satisfactory operation of sheave guards and wire rope spooling. Check for a minimum

Digitized by Google

of 2-1/2 wire rope turns remaining on the drum when operating at the extreme lowered position or extended hoist cable.

—Check electrical drive components for proper operation and freedom from chatter, noise, vibration, or overheating.

—Check electrical controls for proper operation and response.

—Check pneumatic drive systems for evidence of air leakage, loose connections, vibration, and improper lubrication. Check the air pressure gauge for the proper operating pressure.

—Check the hydraulic components for smooth operation, proper stroke of operating cylinders. Also check for slamming of system's valves as they open and close, leaks, evidence of entrapped air in the system, abnormal vibration or noise, and hydraulic fluid temperature being within limits.

LOAD TEST

The next type of testing that we will discuss is LOAD TESTING. This must be performed on all shipboard handling equipment at every ship overhaul or, as a minimum, every 4 years and after repair or replacement of load bearing components or equipment overhaul. This load testing should be scheduled for accomplishment during your overhaul period. Load testing of powered (including hand-operated) handling equipment will consist of a static load test, a dynamic load test, and a rated load test. While load testing of nonpowered handling equipment will consist only of a static test. An example of "LOAD BEARING" components would be those parts of the handling equipment that are stressed while lifting or holding a load such as the brakes, structure, load chain or wire rope, sprockets, sheaves, hooks, motors, shafts, clutches, gears, couplings, and bearings.

As an example, let's review the required testing of a hoist. To determine what load testing is required after a particular maintenance action is accomplished, we will use table 1-1 for general guidance.

Static Load Test

A static load test is designed to physically test the structural and mechanical integrity of handling equipment. Loads may be applied either by using test weights or by mechanical devices that have load-measuring gauges. The load you will use will depend on the test requirements and your particular facility availability.

The static test load must be equal to 200 percent of the rated load, and should be applied while the ship is at pier side or moored in calm seas unless otherwise specified. In the event you must perform the static test while your ship is at sea, the static test load shall be 150 PERCENT OF THE RATED LOAD while the ship is underway in moderate seas (Beaufort Sea State 3 or less). The equipment you test must hold the static test load for a minimum of 10 minutes. Observations by test personnel during the load test will be done from behind a safety shield. The purpose of these observations is to detect defects, such as brake slippage or component malfunction. These defects are not necessarily apparent during inspections that follow load testing. Also inspections will be done immediately following static load test. The test will be completed in order to identify evidence of binding, warping, permanent deformation, or cracking.

Dynamic Load Test

Following completion of the static load test, powered (includes hand-operated) handling equipment will be subjected to dynamic load testing. These tests are conducted at least once every 4 years and after major repair/overhaul, replacement of critical components, or a ship overhaul. A dynamic load test is used to demonstrate the capability of powered weight handling equipment to operate with a rated load under the dynamic conditions of ship's motion and equipment operation.

Dynamic test load shall be equal to 150 percent of the rated load while the ship is at pier or moored in calm seas, unless otherwise specified. If you were to have to conduct these tests at sea (state 3 or less), the dynamic test loads would be equal to 125 PERCENT OF RATED LOAD. As far as practical, test loads should be moved completely through the equipment operating range, within the limits of all operating modes (hoisting, rotating, traversing, raising, lowering, and traveling). You should stop the equipment at least three times in each direction to ensure

Digitized by Google

Table 1-1.—Hoist Load Test Requirements

Maintenance Action	Load Tests Required
1. Complete Overhaul or Major Repair [for example: replacement or repair of speed reducer (transmission) or motor] or load (holding) brake 2. Repair or replacement of hoisting sprockets or drums (including shafts and bearings) 3. Replacement or repair of hoisting load or traversing brake 4. Replacement of load chain or wire rope and attaching hardware 5. Replacement of load or suspension hook or block components 6. Replacement of trolley wheels, axles, or frame	No-load (paragraph 700-2.123) Static (paragraph 700-2.136) Dynamic (paragraph 700-2.149) Rated-Load (paragraph 700-2.153) These four tests are required for actions 1 through 6
7. Disassembly of hook and block to inspect components and then reassembly using the same components 8. Adjustment of brake or replacement of brake shoes or friction discs 9. Repair or replacement of components not between load break and load (couplings, clutches, gears, shafts, or motors if not listed above)	No-Load Rated Load These two tests are required for actions 7 through 9
10. Replacement of pneumatic or electrical components (other than brakes or motors) 11. Replacement of chain reel or basket 12. Replacement of load bearing fasteners such as bolts, screws, clevis pins, studs, ball-lock pins, and so forth, when new fasteners are according to NAVSEA drawings or directions	Only no-load test is required for actions 10 through 12

proper brake operation. Again, the equipment must be observed during the test to evaluate any failures. The equipment should be cycled through the test sequence only enough times to evaluate equipment failure

Rated Load Test

After satisfactory completion of static and dynamic load test, powered (includes hand operated) weight handling equipment will be

Digitized by Google

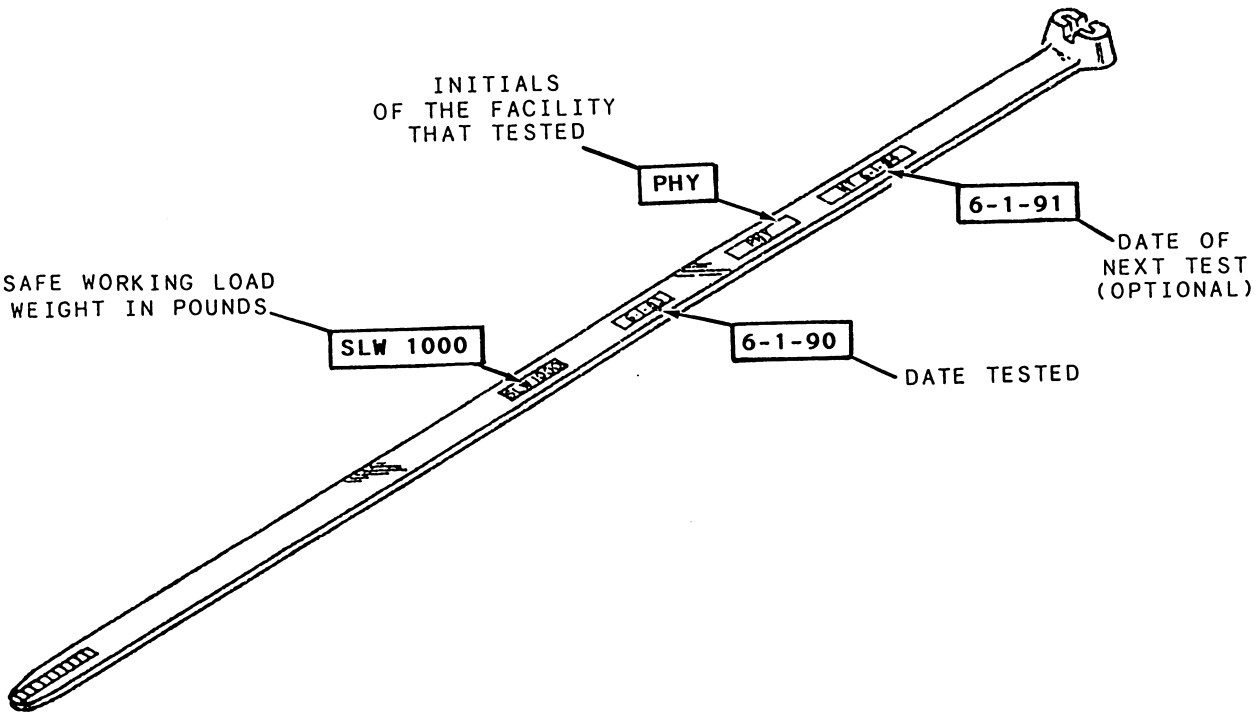

Figure 1-25.—Periodic load test record strap.

subjected to a rated load test. The rated load is a nonvariable weight in pounds, identified on the label plate or tag, and is specifically designated for each type of equipment. You must use test loads equal to 100 percent of the rated capacity of the equipment.

Rated load tests are used to demonstrate equipment capability to operate with a full load at its rated speed through the complete range of its operating limits. If an automatic mode exists, you must operate the equipment in the automatic mode to demonstrate proper functioning at each position, stop, or level. The performance of all interlock and limit switches shall be tested. To demonstrate adequacy of control and brake, emergency stop controls (if any), you should actuate them with the equipment operating with the rated load at the highest rated speed in lowering direction once for each mode of operation.

INSPECTION AND TEST RECORDS

Once your handling equipment has satisfactorily passed the required inspections and load test, it should be so marked by the activity conducting the test. Also, a record of each test shall be maintained by the testing activity. As a minimum, the marking shall include the name of the testing activity, the date (yr/mo) tested, and the rated load or safe working load (SWL). For submarine weapons handling equipment, the log identification number (Log ID No.), the hull number owning the tested equipment, and the date (yr/mo) of the next scheduled test shall also be included. New handling equipment will be load tested and marked by the manufacturer as specified in the applicable procurement documents.

The marking of your handling equipment should be in accordance with *Shipboard Ammunition Handling and Stowage*, chapter 700, NAVSHIPS S9086-XG-\STM-000. A periodic load test record strap (fig. 1-25) shows entries that might be seen on wire rope slings. Color coding is limited to local control only. It may be used in addition to, but not as an alternate for, one of the authorized methods.

Subsequent to marking, the following information shall be recorded in a permanent log:

—Equipment identification

—Date of test or inspection

Digitized by Google

—Description of the test or inspection

—Weight used for the test, in pounds

—Testing activity

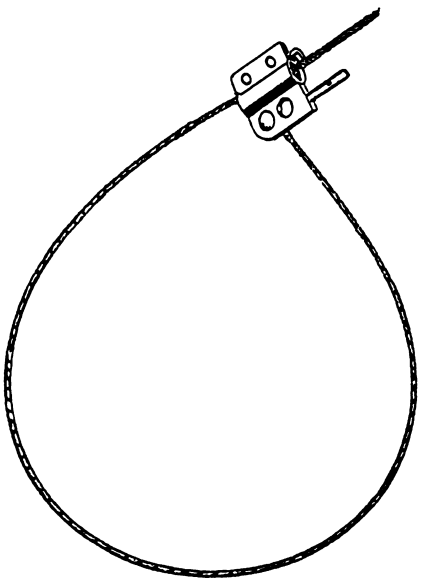

Figure 1-26.—Removable pole snare.

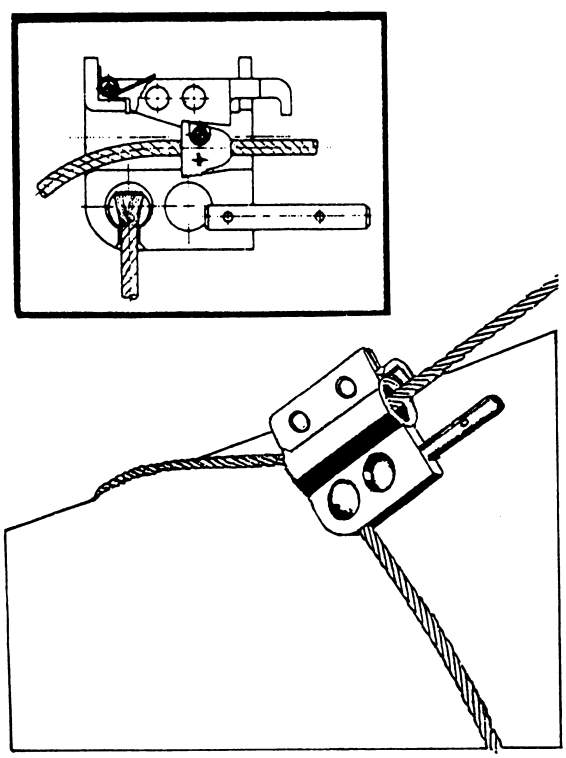

Figure 1-27.—Snare locked on a weapon.

RECOVERY

Your occupational standards identify recovery operations as a task that second class petty officer will direct. Because of the limited number of personnel assigned to these special billets, little is known about the requirement of the assignment. In this topic, we will cover the general procedures and equipment used in weapon recovery so you may better understand the requirements entailed in this operation. Two of the more common weapons will be used as examples. The recovery operation can be generally divided into the following phases:

—Approach

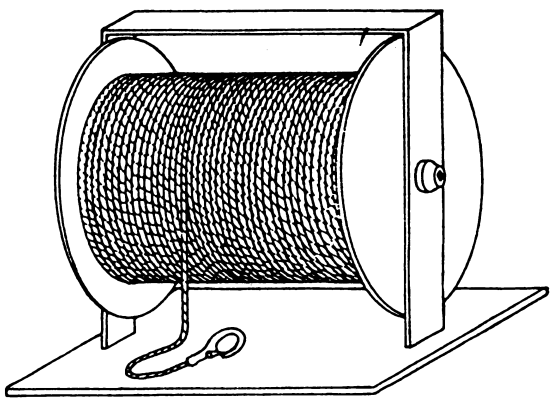

Figure 1-28.—Polypropylene line.

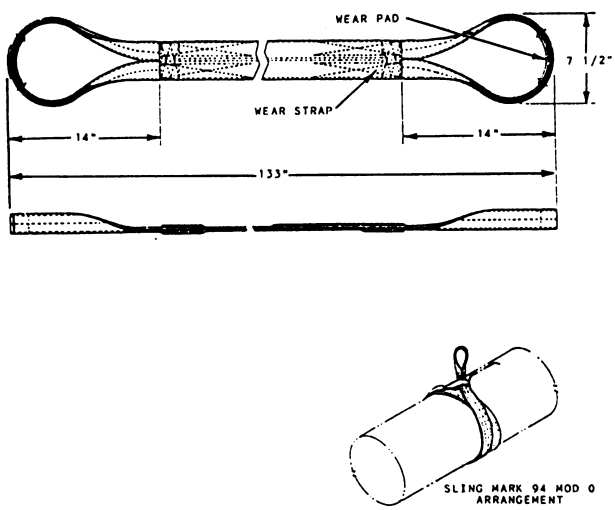

Figure 1-29.—Torpedo sling.

Digitized by Google

—Capture

—Retrieval on board

—Post-run

In the approach phase, the recovery ship maneuvers into a position to launch a powered rubber boat manned by recovery personnel. The capture phase consists of the personnel in the rubber boat attaching recovery hardware to the weapon. Retrieval on board phase is the physical act of bringing the weapon aboard the recovery vessel, whether it be by pulling it up a ramp or lifting it from the water with a crane or boom. Once on board, the post-run phase procedures are conducted to ensure the weapon is safe to handle, stow, and transport.

RECOVERY EQUIPMENT

The equipment currently approved for use in the recovery of weapons is generally of simple design requiring little maintenance. This equipment consist of snares (figs. 1-26 and 1-27), line (fig. 1-28), hoisting slings (figs. 1-29, 1-30, 1-31, and 1-32), a rubber boat (fig. 1-33),

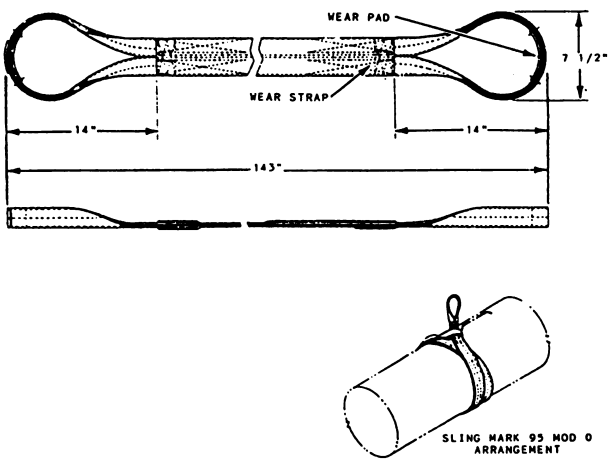

Figure 1-30.—Torpedo Sling Mk 95 Mod 0.

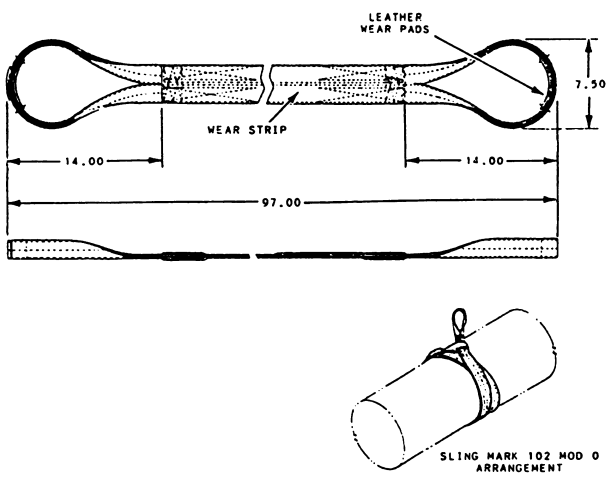

Figure 1-31.—Sling Mk 102 Mod 0.

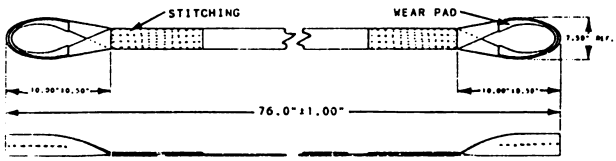

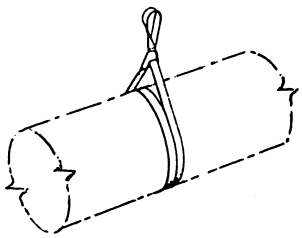

Figure 1-32.—Submarine simulator sling.

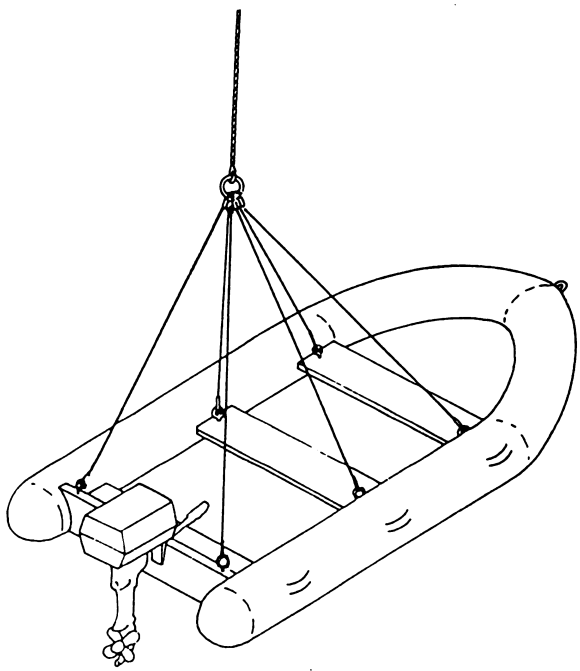

Figure 1-33.—Rubber boat.

Digitized by Google

recovery nose cages (figs. 1-34, 1-35, 1-36, and 1-37), and a portable pole (fig. 1-38), that are used for the capture of an expended weapon and to bring it on board the recovery vessel (figs. 1-39, 1-40, and 1-41).

RECOVERY METHODS

We will discuss the recovery procedures to be used by fixed ramp, portable ramp, and over-the-side recovery vessels. The procedures used by these vessels are similar with respect to the approach and capture of the weapon, but differ in the manner of bringing the weapon aboard. Additionally, the procedures for the approach and capture of all weapons are similar, but differ in the equipment used to secure the weapon to the inhaul line or crane.

Various methods have been used in the past to capture weapons: capture directly from the recovery vessel, the use of swimmers, and the use of a motor whale boat. Obviously, the risk of damage to the weapon and to personnel was considerably higher in the past. As a result, a single method for weapon capture has been developed with the others no longer recommended. A major factor of the recommended procedure is the use of a powered rubber boat to capture the weapon at a safe distance from the recovery vessel. Capture accomplished solely from the rubber boat eliminates the need to put swimmers in the water.

FIXED RAMP RECOVERY VESSEL (TWR/TRB) RECOVERY

The following steps describe the sequence of recovery procedures for fixed ramp vessels, and figure 1-42 shows you the steps of the recovery operation.

—The vessel approaches the weapon, and stations itself a minimum of 100 yards downwind of the weapon. From this position, the vessel launches the rubber boat with the nose cage or portable pole and snare as applicable.

—The rubber boat crew mans the rubber boat via a ladder over the side. Wet suits and/or life jackets are worn by crew members.

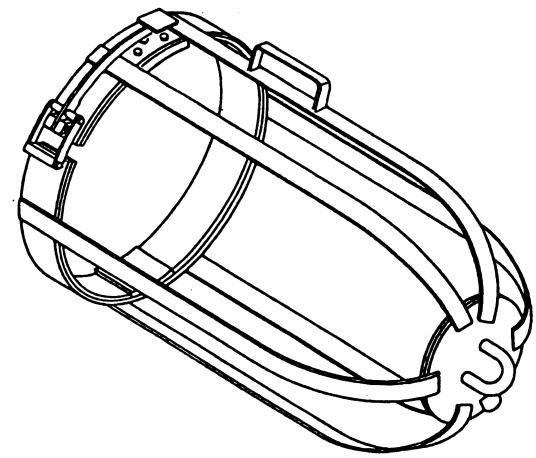

Figure 1-34.—Nose cage (Torpedo Mk 46).

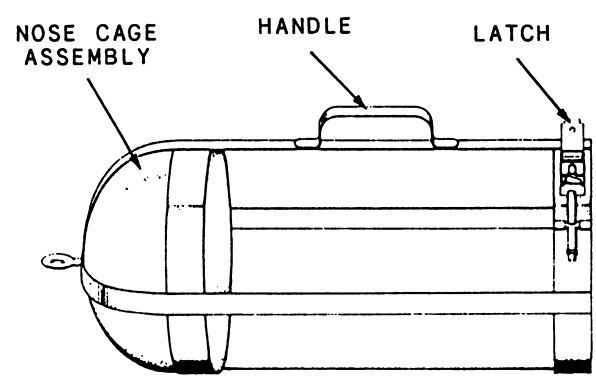

Figure 1-35.—Nose cage (MOSS).

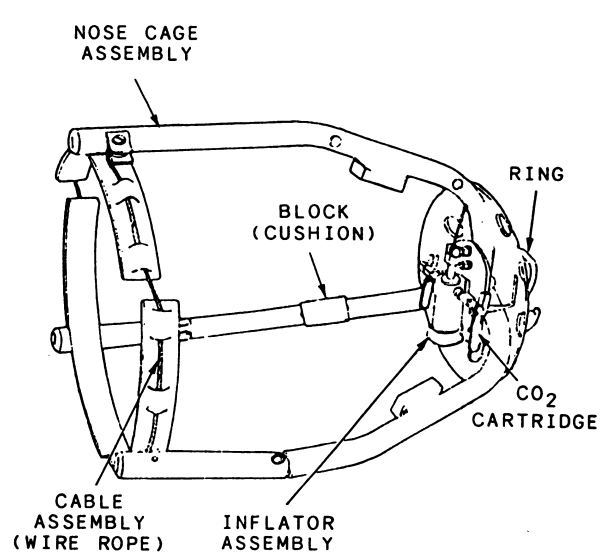

Figure 1-36.—Nose cage (Torpedo Mk 48 STD).

Digitized by Google

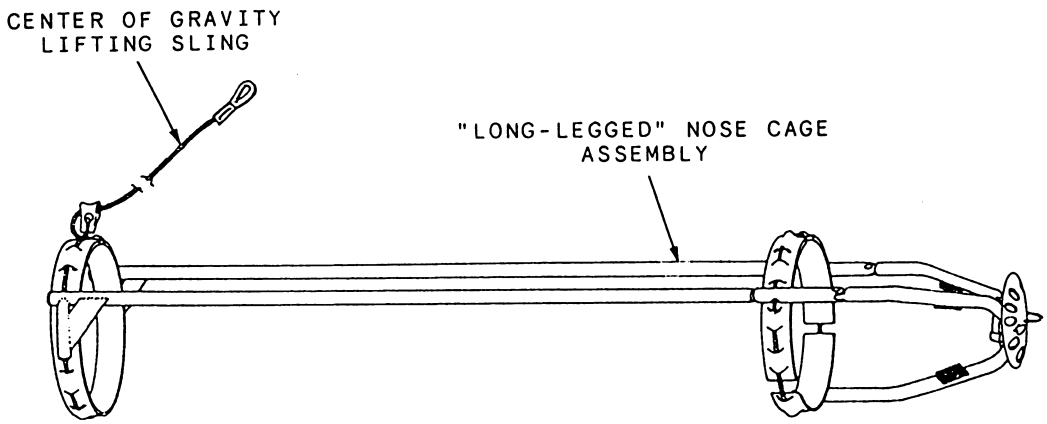

Figure 1-37.—Nose cage (Torpedo Mk 48, long-legged).

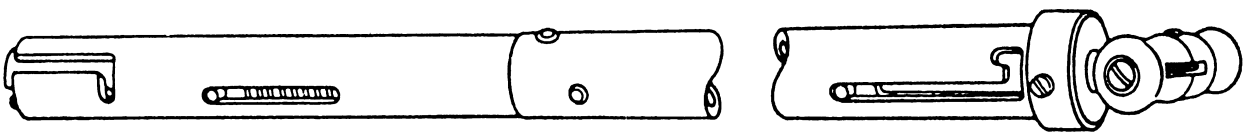

Figure 1-38.—Portable pole.

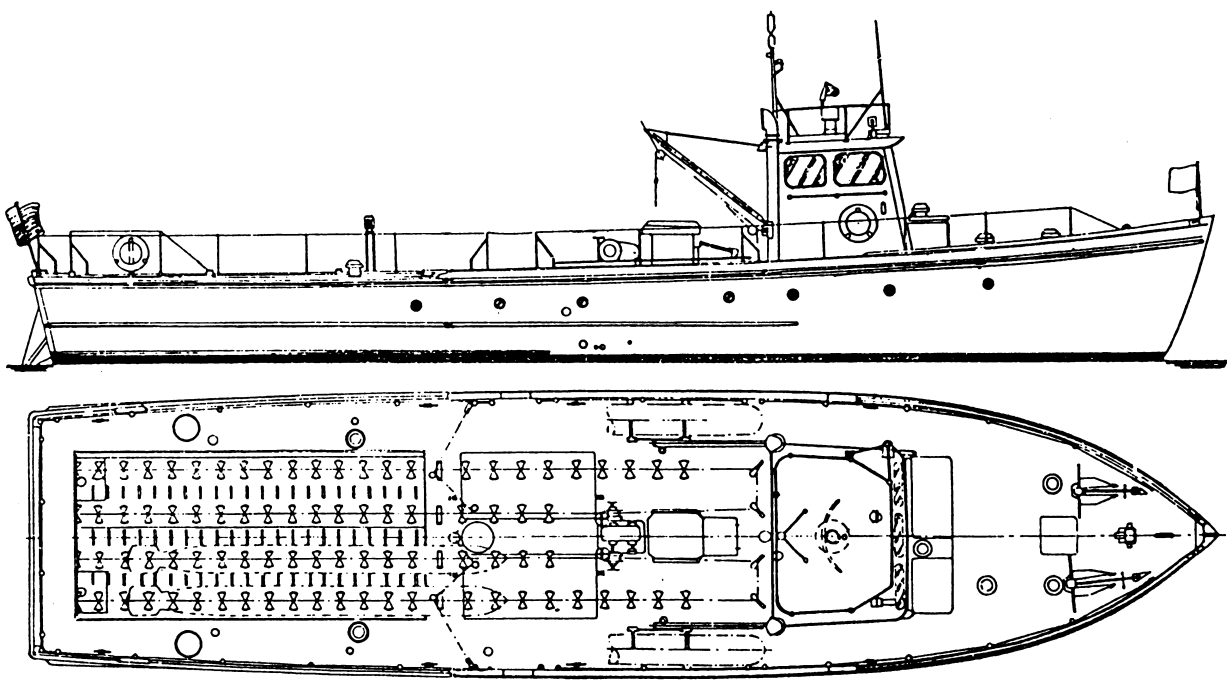

Figure 1-39.—A 72-foot torpedo recovery boat (TRB).

Digitized by Google

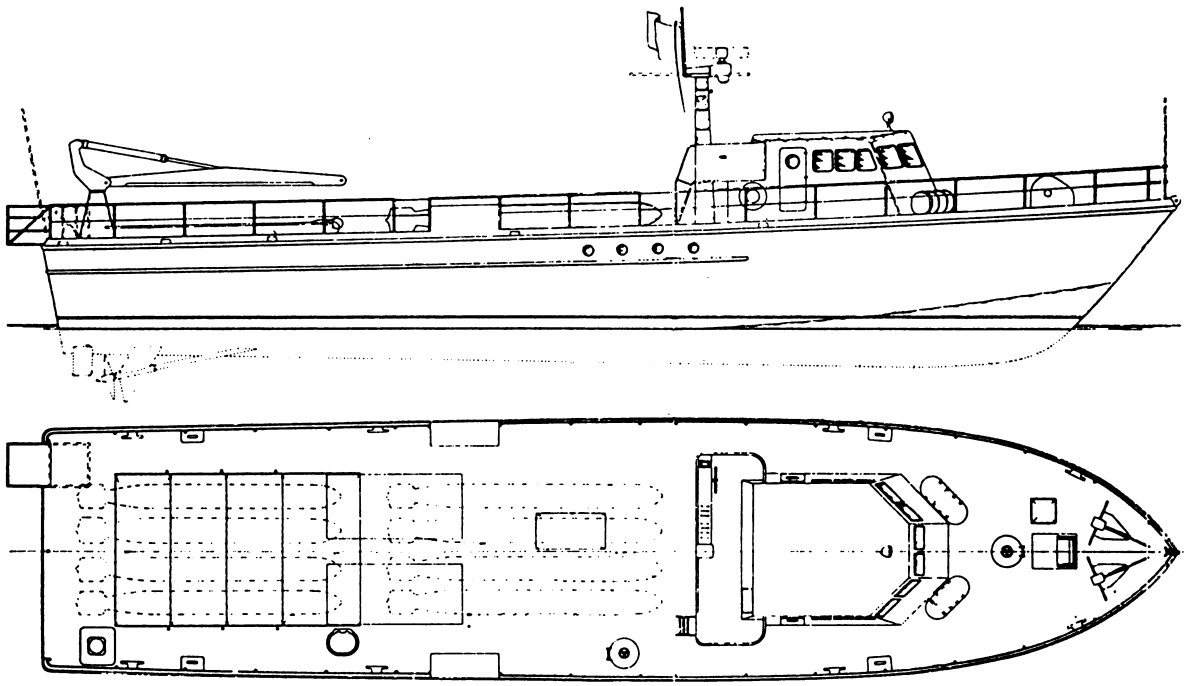

Figure 1-40.—A 85-foot torpedo recovery boat (TRB).

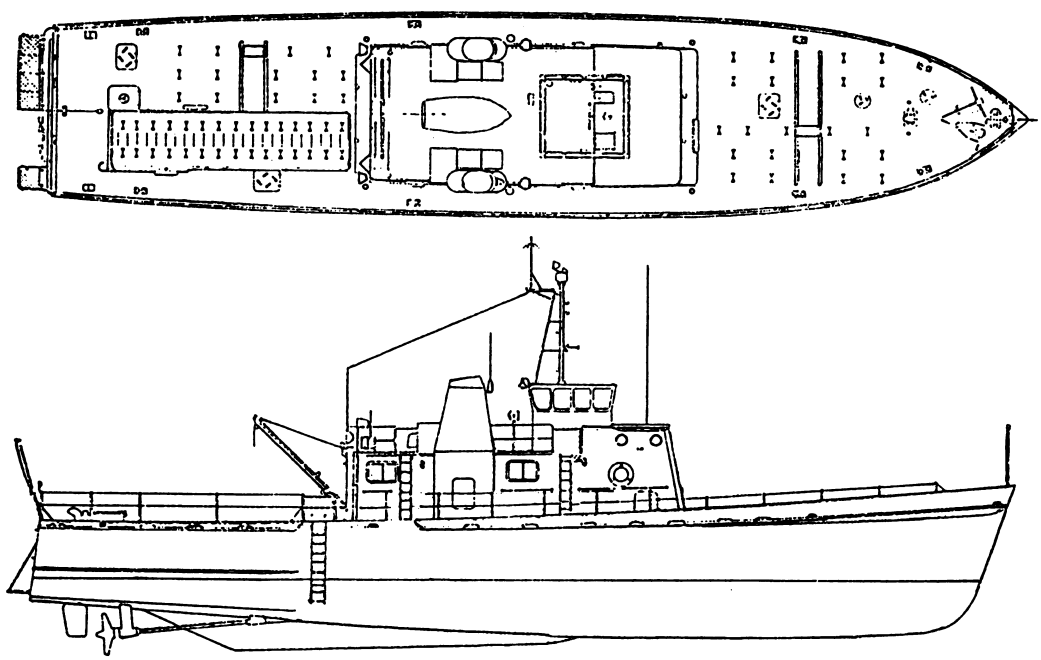

Figure 1-41.—A 102-foot torpedo weapons retriever (TWR).

Digitized by Google

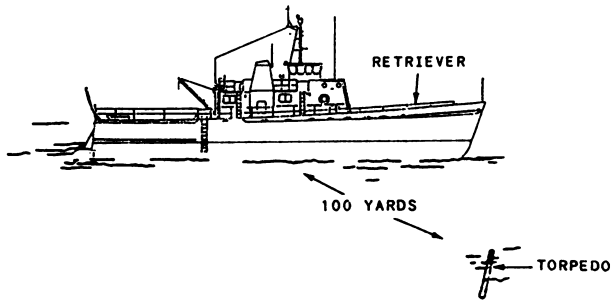

A. RETRIEVER APPROACHES WEAPON

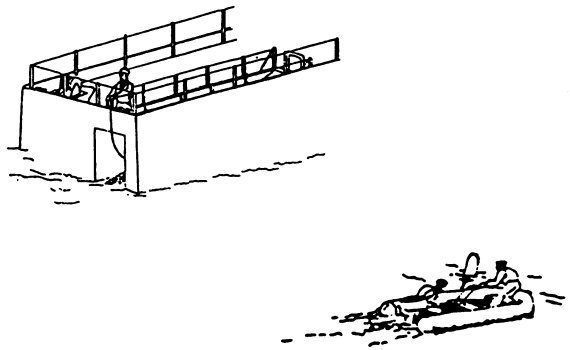

B. RUBBER BOAT APPROACHES WEAPON

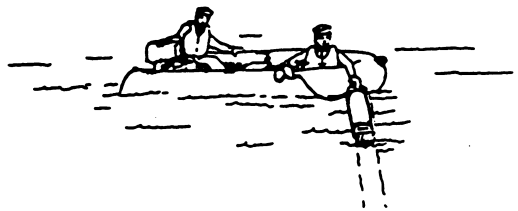

C. RUBBER BOAT CREW CAPTURES THE WEAPON

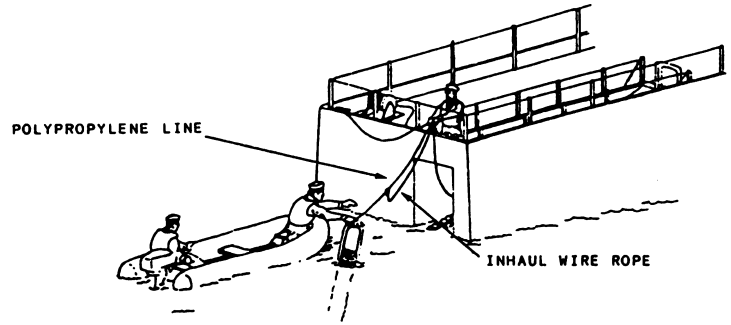

D. THE INHAUL HOOK IS PASSED DOWN THE POLYPROPYLENE LINE

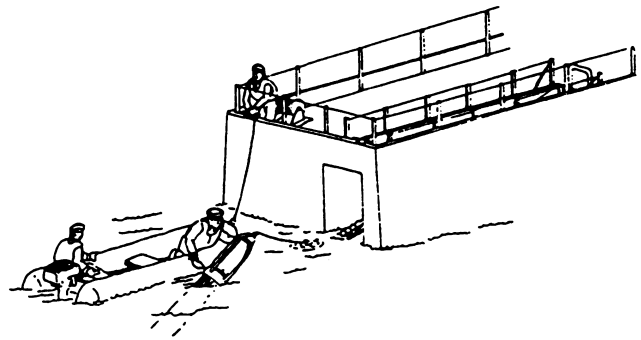

E. RUBBER BOAT CREW ATTACHES THE INHAUL HOOK

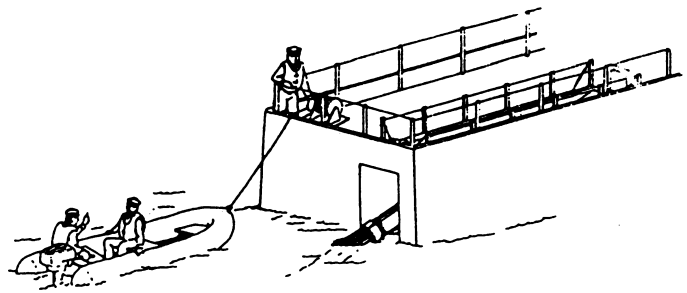

F. THE WEAPON IS WINCHED ABOARD

Figure 1-42.—Fixed ramp recovery.

Digitized by Google

—The rubber boat is launched from the recovery vessel. It maneuvers to the vicinity of the torpedo. Once in position the crew installs the nose cage or snare for weapons having no nose cage.

—The rubber boat returns to the TWR/TRB where the hook-end of a 1/2 inch diameter polypropylene line is passed from the aft deck to the rubber boat. As the line is payed out from the TWR/TRB, the rubber boat returns to the weapon and hooks the snap rings on the nose cage or to the snare.

—The tow line is hauled in to bring the weapon to approximately 20 feet of the transom of the recovery vessel. The recovery vessel continues a straight course into the seas, maintaining 3 to 5 knots to trail the weapon.

—The winch cable hook is slid down the line, and the rubber boat crew approaches and attaches it to the nose cage ring or snare and detaches the tow line.

—The rubber boat maneuvers to a position clear of the operation or it may be towed using the tow line that was detached from the weapon.

—The weapon is winched aboard.

NOTE

When the weapon is on board the recovery vessel, the method and equipment for transfer of the weapon to a stowage location differs with the equipment and arrangement of the vessel.

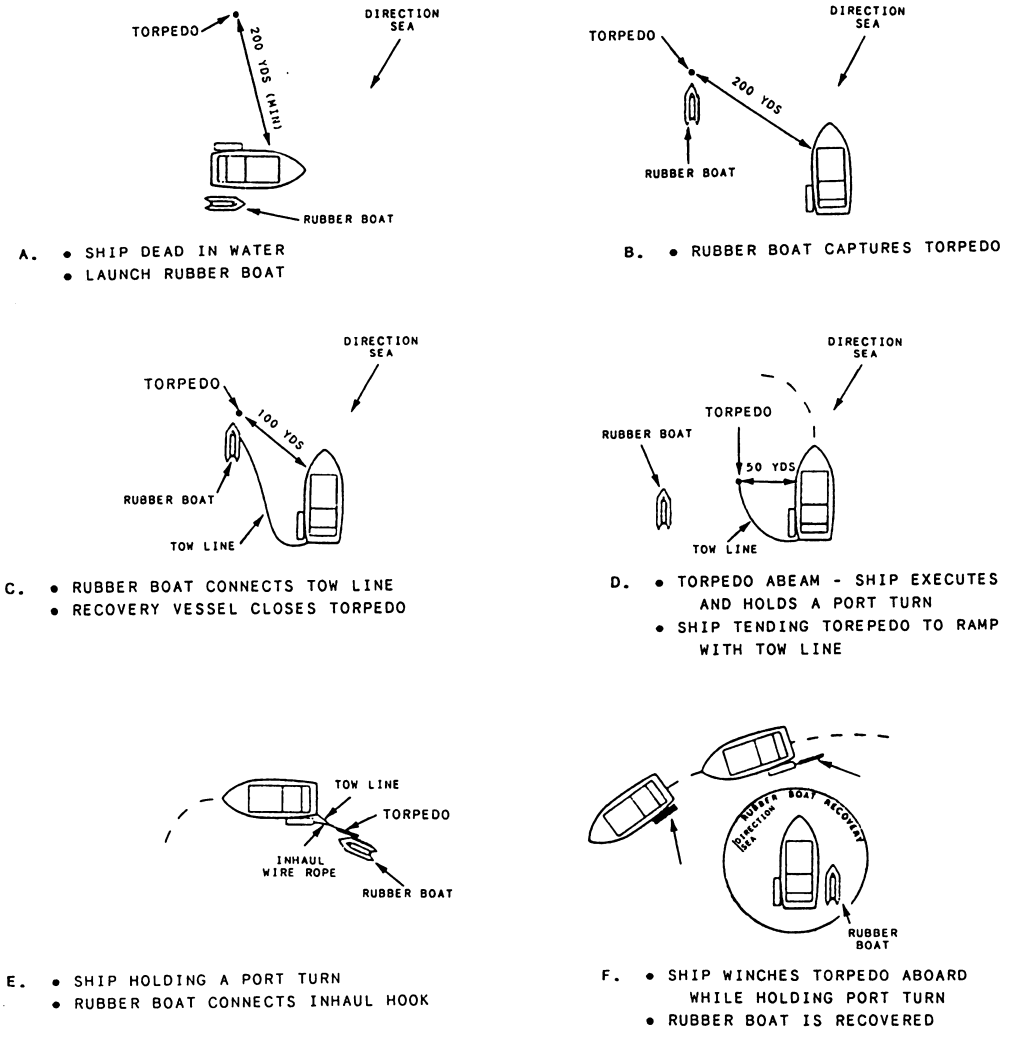

Figure 1-43.—Portable ramp recovery (diagram).

Digitized by Google

—The weapon is transferred to a stowage location.

—The weapon is strapped securely in place.

—Recovery vessel post-run procedures are then performed.

—The rubber boat crew and boat are recovered and recovery equipment is stowed.

PORTABLE RAMP RECOVERY VESSEL RECOVERY

The following steps describe the sequence of recovery procedures for portable ramp recovery vessels. Figures 1-43, 1-44 show the steps of the operation.

—With the ship dead in the water (DIW) approximately 200 yards downwind of the

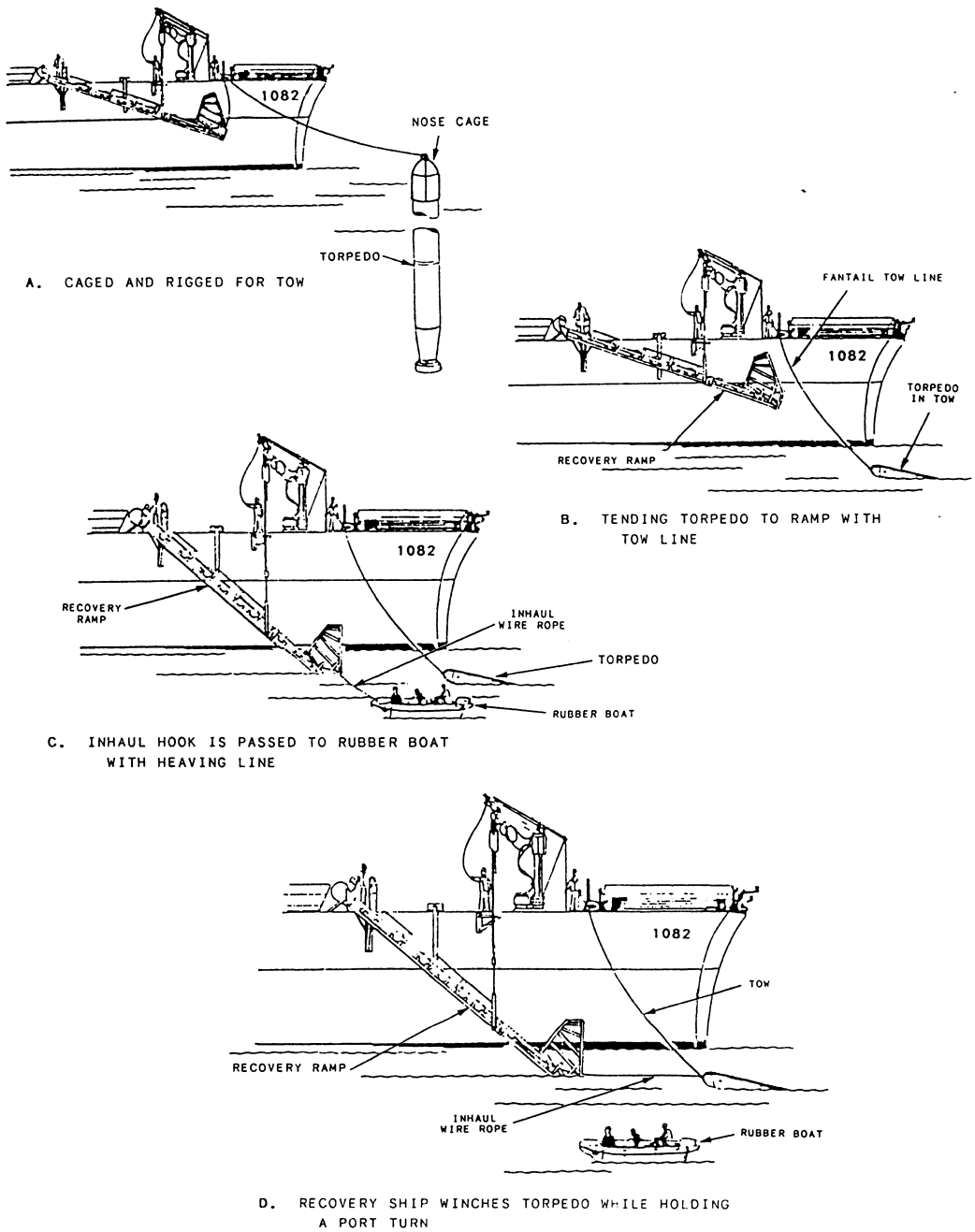

Figure 1-44.—Portable ramp recovery (pictorial).

Digitized by Google

torpedo, the crew will launch the rubber boat using the davit located on the starboard side aft.

—The rubber boat is trailed alongside with a sea painter.

—The rubber boat crew mans the boat via a ladder over the side. Wet suits and/or life jackets are worn by crew members.

—The lines are released to the rubber boat.

—The rubber boat proceeds to the torpedo, installs the nose cage or snare, and returns to the port quarter.

—With a heaving line attached, the ship's crew passes the hook end of the tow line from the fantail to the rubber boat.

—The recovery vessel is maneuvered to approach and place the torpedo 50 yards off the port side with the sea direction on the starboard bow.

—The rubber boat approaches the torpedo as the tow line is freely payed out from the fantail of the ship. The rubber boat crew connects the tow line to the nose cage or snare and stands clear.

—With the tow line attached, the ship enters a port turn as the torpedo is hauled to the vicinity of the ramp.

—The ramp is lowered.

—With a heaving line, the ship's crew pass the inhaul hook to the rubber boat.

—The rubber boat crew connects the inhaul hook to the nose cage or snare.

—The rubber boat stands clear of the inhaul operation.

—With the ship underway (3 to 5 knots) and in a port turn, the ship winches the torpedo up the ramp.

—The ramp is elevated just above the bail bracket.

—The support bail bracket is positioned outboard.

—The ramp is lower onto the bracket.

—The line is disconnected and cleared from the ramp.

—The torpedo is secured to the ramp with two lashing straps.

—The funnel is removed, swung inboard, and secured to the deck.

—The torpedo is transferred to deck storage.

—The rubber boat crew and boat are recovered, and the recovery equipment is stowed.

—The recovery equipment is secured, and post-run procedures are performed.

OVER-THE-SIDE RECOVERY

The following steps describe the sequence of recovery procedures for vessels using a crane or boom. Figure 1-45 illustrates the procedure.

—The vessel approaches the weapon maintaining position 200 yards down-wind. It launches the rubber boat with recovery equipment secured aboard.

—The rubber boat crew mans the rubber boat wearing wet suits and life jackets.

—The rubber boat departs the vessel, approaches the torpedo, and installs the nose cage or snare.

—The rubber boat returns to the recovery vessel, where the hook end of the tow line is passed to the rubber boat.

—The recovery vessel and rubber boat approach the torpedo on a course that will put the weapon 50 yards abeam. When the weapon is closed to 100 yards, the rubber boat crew approaches the weapon as the tow line is payed out from the recovery vessel, and connects the tow line to the nose cage of the torpedo.

—With the tow line attached, the ship commences a turn to the same side that the crane/boom is installed.

Digitized by Google

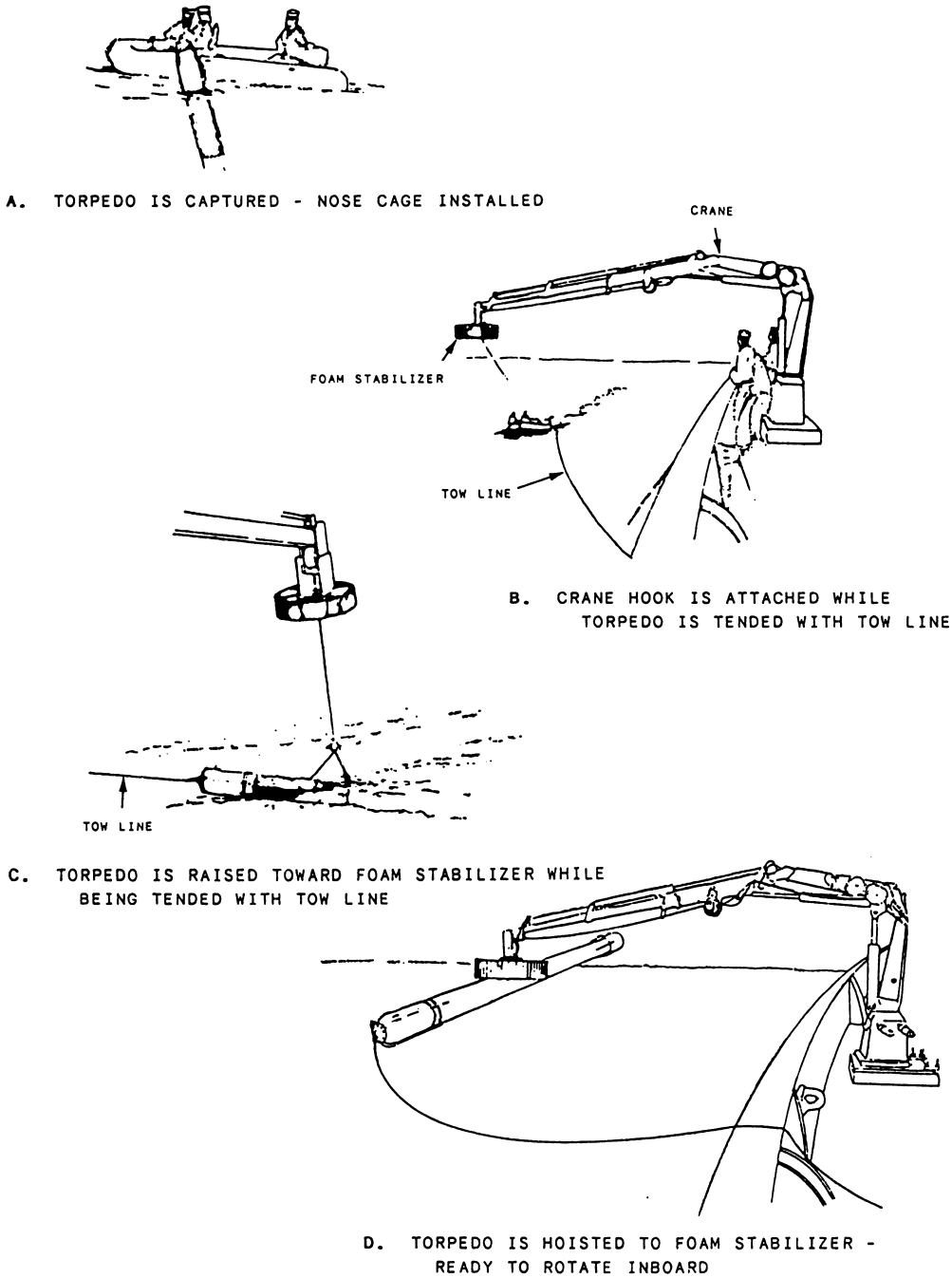

Figure 1-45.—Over-the-side recovery sequence.

—With the ship holding the turn, the rubber boat crew connects the crane/boom hook to the wire rope choker of the nose cage or lifting sling.

—For vessels not equipped with an articulating crane and foam stabilizer, attach a tag line to the ring on the nose cage prior to the weapon being raised.

—The rubber boat maneuvers clear of the loading area.

—The torpedo is hoisted clear of the water and secured on the deck cradle.

—Upon completion of the torpedo recovery operation, the vessel recovers the rubber boat and secures all recovery equipment.

Digitized by Google

—Post-run procedures are performed as required.

POST-RECOVERY

We have covered the different procedures used for recovery depending on the type of vessel used. Now we need to talk about weapon characteristics and how this will affect what we will do with the weapon. Let's use two weapons to illustrate the concept of this procedure.

MK 46

The first things you must know are the end-of-run characteristics. An expended Mk 46 floats in a horizontal position just at the surface. The markings on the weapon are usually international orange and white for ease of identification. The torpedo releases a green dye marker to assist recovery personnel in locating it. The dye pot well is located in the top of the exercise section. It may also be fitted with a 45-KHz pinger, which is also located in the top of the exercise section.

Safety Precautions

Safety precautions that must be followed during post-recovery are discussed in the following paragraphs.

—The weapon should not be handled by the shroud ring or other control surfaces.

—The transducer face should not be allowed to strike any solid object during handling operations. A protective cover should be installed as soon as possible.

—All personnel should keep clear of the sharp propeller blades. A propeller guard should be installed as soon as possible to ensure safety of your personnel and to minimize the chance of damage to the propellers.

—If the seawater battery arming lanyard failed to extract during launch, DO NOT EXTRACT IT. Bend each end 90 degrees or more to prevent accidental extraction or inadvertent reuse.

—If the suspension bands (used for air launch) are still around the torpedo midsection, remain clear of both bands and DO NOT PULL ANY WIRES attached to them. At the earliest opportunity, secure the suspension bands by installing a safety bolt and nut in the eye of each suspension band lug.

Procedures

Unless the weapon can be returned to a maintenance activity within 24 hours of recovery, the following procedures must be carried out.

—If a nose cage has been used, it should be removed and a transducer protective cover installed.

—The location pinger should be shut off.

—The fuel compartment should be vented using a vent and fuel cap tool. Vent plugs should be resecured at completion of venting.

—You should flush the exterior of the weapon with fresh water. Ensure that the lead dropper cavities are flushed clean.

—Remove the dye pot cover, and remove the dye container and discard it. Flush the dye pot with fresh water until the water comes out clear.

—Dry the weapon with low-pressure air (25 psi max).

—Reinstall the dye pot cover.

—The joint ring access covers shall be removed and joint ring areas dried with low-pressure air. When the areas are dry, they shall be lubricated freely with flushing oil, and the access covers shall be replaced.

—Last but not least, ensure the propeller guard is installed.

MK 48

Again, let's start with the end-of-run characteristics for the Mk 48. An expended Mk 48 floats in the vertical position 1 to 2 feet above the surface of the water. The exercise section is painted international orange. The torpedo is equipped with a locating device that operates in a frequency band of 2.6 to 7.8 kHz.

Digitized by Google

Safety Precautions

The following precautions must be observed during post-run procedures of the weapon.

—The protective nose cover shall be installed as soon as possible.

—Protect your eyes and body from possible spray of Otto Fuel II while venting the fuel tank. Refer to the applicable technical manual for clean-up procedures.

Procedures

Post-run procedures are as follows:

—You should inspect the weapon for external physical damage or indication of internal damage. Damage incurred during firing or recovery will be logged and reported. Use the appropriate Naval Underwater Systems Center form to report damage.

—Deactivate the scuttle system timer switch located near the aft end of the exercise group on the starboard side of the torpedo. Using a wide-tip common screwdriver, rotate the selector switch counterclockwise until the dot or the arrow point is aligned to OFF.

—Vent the fuel tank to the atmosphere.

—Thoroughly rinse the torpedo with clean, fresh water. Fresh water under pressure is recommended for the rinse operation.

—When the torpedo has dried or been wiped dry with clean cloths, install the protective nose cap.

SUMMARY

As you advance up the ladder of success as a Torpedoman, your level of interest in handling will shift from that of just a worker-bee to that of a director or supervisor. Since handling of the weapons will be an almost daily occurrence for you, it is extremely important that you learn as much as you can about the SAFE methods of weapons handling. It will become your responsibility to ensure that the proper procedures and safety precautions are adhered to during any handling, shipping, or stowage evolution with which you might be involved.

Three methods of recovery were discussed: fixed ramp, over the side, and portable ramp. Each were discussed in terms of the positioning of the recovery vessel, the procedures of the rubber life boat crew and the equipment used. Last but not least, safety of operation was discussed for each phase. But this is just the beginning of your education. You will have to strive to stay current with the latest procedures and safety precautions that apply to the specific weapon you are responsible for handling. The list of references located at the end of the chapter should prove to be beneficial in helping you achieve the competence in these new and rewarding assignments.

REFERENCES

Ammunition Afloat, NAVSEA OP 4, Naval Sea Systems Command, Washington, D.C., 1972.

Ordnance Safety Precautions, NAVORD OP 1014, Naval Ordnance System Command, Earle, N.J., 1972.

Ammunition and Explosives Ashore, NAVSEA OP 5, Volumes 1 and 2, Naval Sea Systems Command, Washington, D.C., 1974.

U.S. Navy Explosives Safety Policies, Requirements, and Procedures (Department of the Navy Explosives Safety Policy Manual), OPNAVINST 8023.2C, Chief of Naval Operations, Washington, D.C., 1986.

Firing Craft Procedures for Torpedo Mk 46 Mod 1, Mod 2, and Mod 5, SW515-AO-PRO-020, Naval Sea Systems Command, Washington, D.C., 1986.

Firing Craft Operating Procedures and Checklists, Mk 48 Supplement, NAVSEA OD 44979, Volume 2, Part 7, Naval Sea Systems Command, Washington, D.C., 1986.

Shipboard Ammunition Handling and Stowage, S9086-XG-STM-000, Chapter 700, Naval Sea Systems Command, Washington, D.C., 1984.

Torpedo and Advanced Underwater Weapons Recovery Equipment, Vessels, and Procedures, SW591-AC-PRO-010, Naval Sea Systems Command, Washington, D.C., 1984.

Digitized by Google

Digitized by Google

CHAPTER 2

TORPEDO MAINTENANCE PROGRAM (GENERAL) AND MK 46 MOD 5 TORPEDO MAINTENANCE

OVERVIEW

Discuss the guidelines and procedures for torpedo maintenance in general and the maintenance of the Mk 46 torpedo in specific.

OUTLINE

Torpedo Maintenance Program

Maintenance Responsibility

Mk 46 Torpedo Maintenance Requirements

As a Torpedoman, a large part of your working day will be spent either planning a maintenance schedule or actually performing the maintenance on the weapon, the launching platform, or the support equipment associated with the weapon. Therefore, in this chapter we will provide some insight into the different areas of concern that you will be exposed to on a day-to-day basis.

Torpedo maintenance is based on a three-level concept—organizational, intermediate, and depot. Each level performs specific maintenance functions to support the fleet. The maintenance functions determine the required logistics support resources (facility, personnel, training, documentation, material support, etc.).

TORPEDO MAINTENANCE PROGRAM (GENERAL)

The normal torpedo maintenance requirement is generated as a function of time between tests, rather than a function of operating time (except for the turnaround of exercise torpedoes). Organizational and intermediate maintenance are scheduled to retain the design level of equipment performance or to detect deterioration of that performance. Depot maintenance may consist of both scheduled and unscheduled workloads. Depot maintenance is directed toward the support of the two lower maintenance levels. Typical maintenance functions performed at each torpedo maintenance level are listed in table 2-1. Specific maintenance instructions in technical manuals must be followed for each type of torpedo.

ORGANIZATIONAL MAINTENANCE

This type of maintenance is what you will perform when stationed aboard a ship or submarine.

Organizational maintenance consists of preoperational inspection, functional tests, and servicing and preventive maintenance functions. Preoperational maintenance includes electrical continuity tests, the loading of weapons into launchers, installation of explosive arming devices or mechanisms, inspection, and the removal of ordnance safety devices. Servicing and preventive maintenance functions are those operations that maintain a weapon in a ready condition.

INTERMEDIATE MAINTENANCE

Under normal conditions, an organizational activity receives torpedoes that are fueled, checked out, and certified ready for use. If a torpedo fails prelaunch checks, it must be returned to an intermediate maintenance activity at the earliest opportunity.

Digitized by Google

Table 2-1.—Summary of Torpedo Maintenance Functions

WEAPON SYSTEM ELEMENT	ORGANIZATION LEVEL MAINTENANCE	INTERMEDIATE LEVEL MAINTENANCE	DEPOT LEVEL MAINTENANCE
Torpedoes	Storage Handling Tube Loading Prelaunch Check Exterior Cleaning and Touchup Canning and uncanning	Subsystem Checkout Overall System Check Fault Isolate to FIR/Component Level FIR/Component Replacement Disassembly/Assembly Fueling/Defueling ORDALT Incorporation RFI Storage or Issue	FIR Item Repair ORDALT Incorporation Factory Type Repair Services
Warhead	Selection of Exploder Mode Installation and Removal of Arming Device and Exploder (OP instructions apply)	Disassembly/Assembly RFI Replacement Subassembly Test Fault Isolate to FIR/Component Level Insertion of S&A Device and Exploder	FIR Item Repair ORDALT Incorporation Factory Type Repair Services
Workshop Test and Handling Equipment	N/A	Fault Isolate to Component/Circuit Card Replacement of Component/Circuit Card Preventive Maintenance ORDALT Incorporation	Repair of Components Repair of Circuit Cards ORDALT Incorporation

Digitized by Google

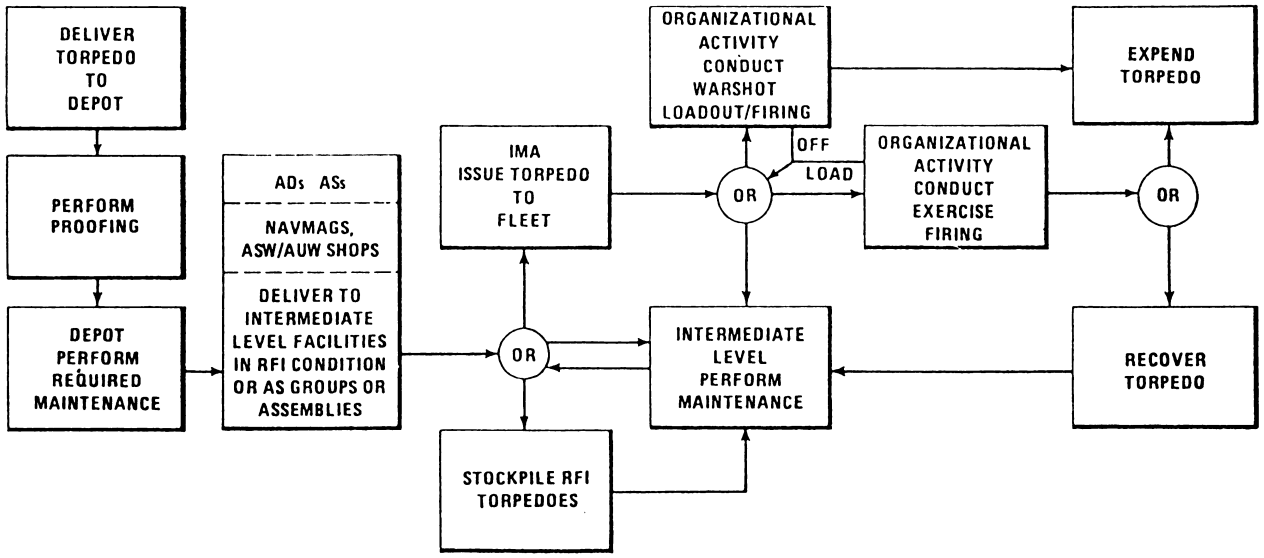

Figure 2-1.—Typical torpedo maintenance cycle.

Your intermediate maintenance will include complete systems tests, inspections, and tests and adjustments of individual major assemblies or sections that comprise the weapon or equipment.

DEPOT MAINTENANCE

Maintenance at this level involves the complete overhaul, rework, or ORDALT/modification of assemblies or equipments by an industrial-type activity. Normally, these activities are staffed with civilian personnel. The functions performed require facilities and equipment generally associated with production and/or personnel with specialized experience or training. Depot activities are capable of complete modernization, repair, and inspection of major systems. FIR component repair is provided at this level. When it is technically achievable and acceptable economically, a maximum of 90 days of depot level turnaround time is planned for each torpedo item.

TORPEDO MAINTENANCE CYCLE

A typical torpedo maintenance cycle is shown in figure 2-1. It sequentially identifies the major functions and activities required to maintain the torpedo. The torpedo, without a warhead, is delivered by a contractor to the proofing activity. The warhead is delivered to the explosive loading facility and maintenance level sites when needed. Exploders and arming devices are delivered in accordance with appropriate torpedo OP instructions. The depot assembles, tests, proofs, accepts, prepares, and delivers torpedo groups/ready for issue (RFI) torpedoes to the intermediate level maintenance activity (IMA). The torpedo groups are then either stored or assembled. If assembled, they are checked out, and placed in an RFI status. The RFI torpedoes are either loaded out to an organizational level user or placed in a torpedo stockpile.

If a torpedo is loaded out to you, as an organizational level user, it will either be in the exercise configuration or in the warshot configuration. If it is not fired within a specified period from the preceding turnaround, you will return it to the intermediate level for verification. Torpedoes fired in the exercise configuration can be recovered. When recovered, torpedoes are returned to an intermediate maintenance site for turnaround maintenance. If a torpedo is lost and cannot be retrieved, appropriate reporting and return of the record book to the reporting custodian is required. A torpedo initially stockpiled at the intermediate level is either loaded out to an organizational level user, or removed from storage for turnaround maintenance after a specified period.

A warshot torpedo maintenance cycle consists of a complete system test and replacement of defective FIRs and spares. An exercise torpedo maintenance cycle occurs after every exercise run and includes flushing of internal components of the afterbody. It also includes FIR tests and

Digitized by Google

MAINTENANCE ACTIVITIES	ORGANIZATIONAL	INTERMEDIATE	DEPOT
SHORE ESTABLISHMENT			
ASW Facility			
Naval Magazine (NAVMAG)	X	X	
Naval Weapon Station (NWS)	X	X	
SUB BASE	X	X	
Advanced Underwater Weapons (AUW)			
Naval Air Station (NAS)	X	X	
Naval Air Facility (NAF)	X	X	
FIR Facility			
NUWES, Keyport		X	X
TRAINING COMMAND GROUPS AND UNITS			
ASW/AUW School	X	X	
Fleet Training Command	X		
SHIPS			
CV	X		
AS	X		
AD	X		
AE/AOE	X		
DD/DDG	X		
FF/FFG	X		
CG(N)	X		
SS	X		
SS(N)	X		
SSBN	X		

Figure 2-2.—Activity maintenance responsibilities by maintenance level.

system tests. Specific maintenance instructions are provided in applicable OP documents.

Torpedoes in excess of the organizational level load out requirements are stockpiled in RFI condition at IMA/naval magazines and tenders. Preventive maintenance is performed to ensure that each torpedo is kept in a ready condition.

MAINTENANCE RESPONSIBILITY

Maintenance activities are normally responsible for the level(s) of maintenance assigned as shown in figure 2-2. Organizational level maintenance is fleet managed. Intermediate maintenance responsibilities are assigned to both the Commander, Naval Sea Systems Command, and fleet managed facilities. Depot maintenance responsibilities are assigned to NAVSEASYSCOM managed facilities.

Your effective maintenance of torpedoes and torpedo components at the intermediate and depot level ensures the availability of adequate serviceable torpedoes to meet fleet operational, training, and contingency requirements.

MAINTENANCE ACTIVITY DATA MANAGEMENT REPORTS

The assessment of in-service torpedo performance is a continuing requirement. Figure 2-3 outlines the various systems for the collection of information regarding torpedo maintenance, ORDALTs, logistics, configurations, deficiencies, informal comments, and recommendations or requests for assistance. Use of these reporting systems enables a Torpedoman's experience to be evaluated, and proper management/logistics/engineering action be taken on deficiencies and

Digitized by Google

INFORMATION/REPORTING SYSTEMS	TORPEDO MAINTENANCE REPORTING REQUIREMENTS		
	Organizational Level	Intermediate Level	Depot Level
• TMRS, Torpedo Maintenance Reporting System (Includes RUDTORPE)[1, 2]	X	X	
• Torpedo Firing Reports[3]	X	X	
• Maintenance and Material Management (3-M)	X	X	X
• Torpedo Record Book[4]	X	X	X

[1]TMRS (Torpedo Maintenance Reporting System), Torpedo Maintenance Data Form (NAVSEA Form 8510/5). Applies to all torpedoes.

[2]RUDTORPE (Report of Unsatisfactory or Defective Torpedoes or Equipment) is a subordinate report of TMRS.

[3]Applies to all torpedoes. Each type of torpedo has a separate firing report.

[4]Pertinent torpedo data entered in accordance with applicable instructions.

Figure 2-3.—Management data reporting.

problems encountered. NAVSEA Instruction 8510.3 provides the procedures for reporting/using torpedo maintenance, modification, repair, and configuration data from the organizational, intermediate, and depot maintenance levels. It also provides the method for maintenance facilities to communicate with or request information from the technical or logistics support activities regarding procedures, documentation, disposition, or torpedo maintenance support. Proper use of the management data inputs/outputs is a vital link that can enhance all levels of maintenance support, and improve fleet operational capability.

MK 46 MOD 5 TORPEDO MAINTENANCE REQUIREMENTS

In chapter 4 of the *Torpedoman's Mate Third Class* rate training manual, we discussed component identification, function operation, and safety features of the Mk 46 torpedo. In the following paragraphs, we will address torpedo maintenance only. The information in this chapter is written to provide the knowledge level portion of the applicable occupational standards for performing maintenance on the Mk 46 torpedo. Procedures for performing the maintenance on this torpedo is contained in applicable technical manuals and must be followed in all maintenance actions.

QUALITY ASSURANCE CHECKLIST/SHOP TRAVELER

A single consolidated Quality Assurance Checklist/Shop Traveler (QA/ST) should be provided for all torpedo maintenance actions. A QA/ST provides a checklist used by the individuals doing the maintenance. The checklist briefly describes what the result of each maintenance step should be—it does not describe the method of accomplishment. The checklist is not intended to be used in place of the detailed maintenance procedures given in the applicable technical manual. However, the QA/ST may be used in place of detailed maintenance procedures when:

1. The individual doing the maintenance is thoroughly familiar with all detailed maintenance procedures in the text.
2. The QA/ST provides a checklist for use by the quality assurance inspector who must verify the proper accomplishment of certain steps and witness the performance of others.

The QA/ST, when filled out and signed by the individual who performed the maintenance and the

Digitized by Google

QUALITY ASSURANCE CHECKLIST/SHOP TRAVELLER
QA/ST NO. 4-17 (SHEET 28 OF 28)
WARSHOT CLASS A MAINTENANCE
(4523)

PARAGRAPH AND STEP	MAINTENANCE STEP	MAINTENANCE PERFORMED	QA VERIFICATION
4-78, 6a	(I) Inspected and free of wax: (a) Nose section transducer diaphragm. (b) Afterbody fire control receptacle J5608 contacts. STOP STOP		
	QA Verification: Inspect preceding steps identified (I).		
4-78, 6b	Nose section transducer diaphragm covered with transparent plastic material (SH) and protective cover.		
4-78, 7	Propeller guard installed.		
4-80	If required, launch accessories installed.		
4-82	Ground strap and grounding bolt removed. Correct Mod 5 identification on afterbody. Date of maintenance recorded in torpedo record book. Torpedo ready for issue.		
	Final QA Verification: Conversion complete. All steps requiring verification have been properly performed.		

Maintenance performed by_____ Date:_____

QA Verification performed by_____ Date:_____

NOTE: Completed Quality Assurance Checklist/Shop Traveler form to be attached to or otherwise kept with the subject equipment until container is shipped.

Figure 2-4.—Page from a QA/ST.

Digitized by Google

quality assurance inspector who verified the maintenance, serves as a production/process traveler. The production/process traveler is attached to, or kept as a package with, the torpedo until final acceptance.

Quality Assurance Requirements

If assigned as the quality assurance (QA) inspector, you must have a thorough knowledge of the torpedo maintenance and inspection process. Preferably, such knowledge should be gained as a result of your earlier experience in the actual performance of the maintenance operations to be inspected. Activities that do not have designated QA personnel can permit qualified maintenance personnel to perform the QA functions providing the maintenance and QA responsibilities are not assigned concurrently.

You must fill out a QA/ST on each torpedo requiring maintenance. The QA/ST may be used during maintenance instead of the detailed procedures in the applicable technical manual, provided the person doing the maintenance is thoroughly familiar with all detailed procedures in the text. Figure 2-4 shows a page taken from a shop traveler.

When a maintenance step is completed, the person doing the maintenance will place a check mark (✓) in the MAINTENANCE PERFORMED column of the QA/ST, indicating the step has been done. When a maintenance step is followed by the inspection hold point symbol, STOP signs, the person doing the maintenance step must inform the quality assurance representative that a hold point has been reached. The quality assurance inspector will inspect the steps that have been completed, or witness a step or steps that are about to be performed.

When the letter (I) appears in a step, the quality assurance inspector must make a visual inspection, or physically feel the area of concern to ensure that the applicable requirements have been met. If the step involves an electrical test or tests, the quality assurance inspector reviews documented test results to ensure performance. If the letter (W) appears in a step, the quality assurance inspector must witness the entire test or procedure as it is being performed.

The maintenance process must not be continued beyond an inspection hold point without permission to proceed from the quality assurance inspector. Permission to proceed is indicated when the quality assurance inspector initials or stamps the QA VERIFICATION column on the QA/ST in the appropriate space or spaces.

After completion of the maintenance action and quality assurance verification, the person who performed the maintenance and the quality assurance inspector sign the QA/ST in the spaces provided. The completed QA/ST must accompany the torpedo until the torpedo is accepted and packaged for fleet issue. The QA/ST must be retained 18 months beyond acceptance of the torpedo (FIR item, if appropriate).

ORGANIZATIONAL LEVEL MAINTENANCE MK 46 TORPEDO

Organizational level maintenance pertains to RFI torpedoes and is intended to prevent external deterioration of torpedoes between periods of scheduled periodic maintenance. Maintenance requirements at the organizational level include preparation of RFI torpedoes for issue, stowage, shipment, preventive maintenance for torpedoes in stowage, recovery procedures, torpedo postrun preservation, and patrol maintenance.

Preparation of RFI Torpedoes for Issue

Your preparation of RFI torpedoes consists of unpacking, depreservation, and torpedo corrosion prevention following the procedures contained in SW515-A5-MMM-010/(C)/MK 46 MOD 5, Vol. 1. After these procedures have been performed, the launch accessories are installed for the configuration required. If the torpedo is already configured for a particular launch method, but is not the launch method desired, the torpedo launch accessories will be removed and the desired accessories installed by following the instructions contained in *Mk 46 FLT Accessories,* SW512-AO-ASY-010/MK 46 FLT ACCESS.

Patrol Maintenance

Patrol maintenance pertains to maintenance required by you after a torpedo has been issued to a firing ship for deployment. Patrol maintenance is performed by firing ship personnel and is limited to external maintenance procedures that do not require separation of the torpedo into sections. Authorized maintenance must be done in accordance with the respective PMS' MRCs.

When you receive a torpedo on board, a preliminary visual inspection of the torpedo's exterior is conducted to check for evidence of damage from the environment, heat, hydraulic

Digitized by Google

fluid leakage, or seawater. Also a visual check for evidence of mishandling is required. Any damage or irregularity must be reported to the proper authority and corrective action taken before proceeding with the inspection. For repairs beyond those authorized at organizational level activities, the torpedo must be sent to an IMA.

Preventive Maintenance for Stowed Torpedoes

Preventive maintenance for stowed torpedoes consists of you conducting a visual inspection and performing external maintenance (cleaning and waxing). Your preventive maintenance is done at periodic intervals to maintain the condition of torpedoes stowed in containers and stowage racks for an extended period of time, especially in high humidity or high turbulence areas. For torpedoes stowed in containers, the torpedo inspection and external maintenance are done only if an inspection of the container reveals an unacceptable level of moisture in the container, or every 6 months. For torpedoes stowed in magazine stowage racks, the inspection and corrosion prevention procedures are performed every 90 days or as required by the applicable MRC.

The external surface of the torpedo is anodized aluminum, designed to resist corrosion. However, a saltwater environment can reduce torpedo service life unless preventive maintenance is performed.

For torpedoes stowed in torpedo tubes, daily, weekly, and monthly maintenance must be performed as required. Corrosion preventive procedures must be done at intervals not to exceed 90 days. If a torpedo is installed in the ASROC system, the launcher must be inspected for harmful salt deposits. Preventive measures must be taken as required by weapons-handling ODs.

Postrun Preservation

Postrun procedures should not be attempted by other than qualified personnel of the Torpedoman's Mate rating. A torpedo must receive preservation treatment to minimize corrosion of certain components. Post run preservation must be performed within 24 hours after recovery using the procedures contained in SW515-A5-MMM-010/(C)MK 46 MOD 5 must be followed.

Preservation treatment includes:

1. The venting of the torpedo
2. The removal and discarding of the dye container and flushing of the dye pot well with fresh water
3. The flushing of the torpedo exterior with fresh water
4. The removal of the propeller baffle (if installed)
5. The flushing of the torpedo coolant passages with steel guard
6. The blowing of water out of the joint-ring areas and lubrication of the ring areas with flushing oil
7. The waxing of the torpedo
8. The installation of the propeller guard and nose section cover

You must observe the following precautions during postrun treatment of the torpedo:

1. The torpedo must not be handled by the control surfaces.
2. The transducer face should not be allowed to strike any solid object during handling operations. A protective cover should be installed as soon as possible.
3. Keep clear of sharp propeller blades. A propeller guard should be installed as soon as possible to ensure safety of personnel and to minimize damage to propellers.
4. Protection must be provided for a possible fuel spray while venting the fuel tank. The fuel tank must never be vented in an enclosed space. If fuel spray comes in contact with the skin, the contact area must immediately be washed with soap and lukewarm water and medical personnel called. Otto fuel cleanup procedures and equipment are described in *Torpedo and Advanced Underwater Weapon Recovery Equipment, Vessels, and Procedures*, OD 13104, and *Otto Fuel II Safety, Storage, and Handling Instructions*, S6340-AA-MMA-010.

After postrun preservation treatment, you may keep a torpedo on board for up to 72 hours. However, it should be returned to a torpedo maintenance facility as soon as possible.

Digitized by Google

Recording of Repairs and Torpedo Maintenance Data Form Reporting

Repairs, replacements, and waivers must be properly recorded on the QA/ST and in the torpedo record book. The torpedo record book must also be updated when a configuration is changed. The new configuration must be indicated in the record book by the serial numbers of the new major assemblies installed in the torpedo. The QA/ST of a major assembly that is removed from a torpedo for a configuration change is attached to the major assembly before it is placed in storage.

Unsatisfactory conditions, defective torpedoes and components, and associated equipment must be reported in accordance with torpedo technical manual *Management Information System*, TW510-AA-PRO-010. The Torpedo Maintenance Data Form 8510/5 is used for this reporting. If the completed data form pertains to a failed FIR component, a copy of the form must be enclosed with the failed unit when it is returned for depot level maintenance.

Actions required to be reported on the Torpedo Maintenance Data Form at IMAs include maintenance, ORDALT/change, RUDTORPE, and combinations of these. Figure 2-5 shows a completed maintenance report.

The maintenance report is required for all actions taken during torpedo preparation, turnaround, verification, and special purpose and post-firing maintenance. A copy of the configuration sheet from the torpedo record book must be attached to the Torpedo Maintenance Data Form 8510/5 at the conclusion of a torpedo turnaround action.

Deficiency Report

If a torpedo is damaged during recovery or on board the recovery ship, a Torpedo Maintenance Data Form (NAVSEA Form 8510/5) must be completed to provide details of the damage and the surrounding circumstances.

A NAVSEA Form 8510/5 is used for all deficiency and report of an unsatisfactory or defective torpedo or equipment (RUDTORPE) reporting by organizational level maintenance activities. The report may be typed or printed legibly with a ballpoint pen. Reports must be completed within 3 days after the ship returns to port and must be distributed as follows:

Copy No.	Recipient
1	Commanding Officer Naval Ocean Systems Center San Diego, California 92152 ATTN: Code 9314
2	Include with hardware being returned to an IMA or designated repair facility. Place the copy inside the container.
3	Type commander (as required by specific TYCOM direction).

Since minimal corrective maintenance requirements are imposed on organizational level maintenance activities, almost all defective Mk 46 torpedoes and associated test, support, and handling equipment hardware are forwarded to the cognizant IMA for corrective action. A deficiency report must be submitted for each instance, where before activation of the firing key, a torpedo is found deficient so it cannot be employed and undergoes an unscheduled offload. The experience gained during firing activity handling of torpedoes is necessary in order to promote general awareness of organizational level deficiencies that may detract from fleet readiness.

Actions where no corrective maintenance or deficiencies are involved—minor adjustments, routine testings, greasing, washing down-painting, etc., reporting isn't required.

A completed deficiency report is shown in figure 2-6. The document number provides a unique number for the reported action. For example, USS NEVER SAIL submitted a deficiency report on a Mk 46 torpedo on 16 February 1991. The action will be reflected as 52190 (USS NEVER SAIL UIC number), 1047 (Action Julian Date) and 0013 (the 13th action reported by USS NEVER SAIL that year). Collectively, it appears as 5219010470013; this will be the number for that action and that action alone, and it will be used for communication and automatic data processing procedures.

In the event you submit a report and later find that the report requires an update, submit a new report. However, use the same document number you used in the original submission. The reason for the update should then be described fully in block 21 of the resubmitted report. Also state in

Digitized by Google

TORPEDO MANAGEMENT INFORMATION SYSTEM
TORPEDO MAINTENANCE DATA FORM
(NAVSEA FORM 8510/6)

2. DOCUMENT NO

UNIT ID CODE (UIC)	ACTION JULIAN DATE	ACTION SEQ NO
0 0 1 0 9	2 1 6 8	0 0 7 4

SECTION I – IDENTIFICATION

1. ACTIVITY/SHIP NAME/HULL NUMBER: NWS YORKTOWN, VA

SECTION II – DESCRIPTION

3. REPORT TYPE
- (1) [X] MAINTENANCE
- (2) [ ] DEFICIENCY
- (3) [ ] ORDALT/CHANGE
- (4) [ ] LOGISTIC
- (5) [ ] RUDTORPE
- (6) [ ] OTHER (SPECIFY)

4. EQUIPMENT REPORTED ON
- (1) [X] WEAPON/VEHICLE
- (2) [ ] TEST/SUPPORT EQUIPMENT
- (3) [ ] DOCUMENTATION/PROCEDURES
- (4) [ ] SPARES
- (5) [ ] OTHER (SPECIFY)

5. TYPE OF ACTION
- (1) [X] WARSHOT TURNAROUND/VERIFICATION
- (2) [ ] PREPARATION/CONVERSION
- (3) [ ] SPECIAL RETURN ACTIONS
  - MK 46 ONLY: CLASS "A" [X] "B" [ ]
- (4) [ ] EXERCISE (POST FIRING) TURNAROUND
  - IF EXERCISE TURNAROUND ACTION, ENTER FIRING DATA BELOW
  - UIC: | JULIAN: |

6. DEFICIENCY FOUND DURING

WEAPON/VEHICLE
- (1) [ ] RECEIPT/DAMAGE INSPECTION
- (2) [ ] DISASSEMBLY INSPECTION
- (3) [ ] COMPONENT TURNAROUND
- (4) [ ] COMPONENT/FIR TEST
- (5) [ ] INITIAL ASSEMBLY
- (6) [ ] SYSTEM TEST
- (7) [ ] FINAL ASSEMBLY
- (8) [ ] RUN ANALYSIS
- (9) [ ] OTHER (SPECIFY)

TEST EQUIPMENT
- (1) [ ] CALIBRATION
- (2) [ ] WEAPON/VEHICLE TEST
- (3) [ ] SELF TEST
- (4) [ ] VISUAL INSPECTION
- (5) [ ] FIR TEST
- (6) [ ] OTHER (SPECIFY)

7. WEAPON/VEHICLE/EQUIPMENT I.D.	MK	MOD	REGISTER/SERIAL NO	8. RUN NUMBER	S/R	9. TORPEDO NALC INCOMING	OUTGOING	10. MOD	11. NEXT SCHEDULED MAINTENANCE
TORPEDO	46	5	472467			1432	1432	0 6 8 6	CLASS "A" [ ] "B" [X] DSLE [ ]

12. TEST EQUIP [X] USED [ ] DEFICIENT	MK	MOD	SER NO	S/R	13. TEST DOC/PROCEDURE [X] USED [ ] DEFICIENT	VOL	REV	CHANGE	PARA/STEP
TORPEDO SYSTEM TEST SET	540	3	223		SW515-AS-MM1-140/(U) MK 46 MOD 5	15			

SECTION III – MATERIAL IDENTIFICATION/ACTION

14. ASSY/FIR ITEM/PART	DRAWING NUMBER AND REVISION	REFERENCE DESIGNATOR	SERIAL NUMBER	REPLACEMENT SERIAL NUMBER	15. ORDALT/CHANGE NO	16. INV	17. S/R	18. F/D	19. JS/CUTABLE	TEST TAPE AND REV	20. FILE CODE/TEST STEP	BLOCK

21. NARRATIVE (1) DESCRIPTION (2) SHOP ACTION (3) RECOMMENDATIONS

1. RECEIVED UNIT FOR CLASS "A".
2. NO DISCREPANCIES NOTED.
3. NONE.

22. REC'D FROM (UIC): | SHIP TO (UIC):

23. MANHOUR/MATERIAL EXPENDITURES

MANHOURS	MATERIAL COST
24	

24. REFERENCES/ENCLOSURES

29. NAME OF ORIGINATOR: William Jones TM1

SUBMITTED DATE (JULIAN): 1 1 1 7 1

Figure 2-5.—Sample of a completed maintenance report reflecting no corrective maintenance.

Digitized by Google

TORPEDO MANAGEMENT INFORMATION SYSTEM
TORPEDO MAINTENANCE DATA FORM
(NAVSEA FORM 8510/5)

2. DOCUMENT NO

UNIT ID CODE (UIC)	ACTION JULIAN DATE	ACTION SEQ NO.
5 2 1 9 0	2 0 4 7	0 0 1 3

SECTION I – IDENTIFICATION

1. ACTIVITY/SHIP NAME/HULL NUMBER: USS NEVERSAIL (DDG 1080)

SECTION II – DESCRIPTION

3. REPORT TYPE
- (1) ☐ MAINTENANCE
- (2) ☒ DEFICIENCY
- (3) ☐ ORDALT/CHANGE
- (4) ☐ LOGISTIC
- (5) ☐ NUDTORPE
- (6) ☐ OTHER (SPECIFY)

4. EQUIPMENT REPORTED ON
- (1) ☒ WEAPON/VEHICLE
- (2) ☐ TEST/SUPPORT EQUIPMENT
- (3) ☐ DOCUMENTATION/PROCEDURES
- (4) ☐ SPARES
- (5) ☐ OTHER (SPECIFY)

5. TYPE OF ACTION
- (1) ☐ WARSHOT TURNAROUND/VERIFICATION
- (2) ☐ PREPARATION/CONVERSION
- (3) ☐ SPECIAL RETURN ACTIONS
- MK 46 ONLY CLASS "A" ☐ "B" ☐
- (4) ☐ EXERCISE (POST FIRING) TURNAROUND
- IF EXERCISE TURNAROUND ACTION, ENTER FIRING DATA BELOW
- UIC ____ JULIAN ____

6. DEFICIENCY FOUND DURING

WEAPON/VEHICLE
- (1) ☐ RECEIPT/DAMAGE INSPECTION
- (2) ☐ DISASSEMBLY INSPECTION
- (3) ☐ COMPONENT TURNAROUND
- (4) ☐ COMPONENT/FIN TEST
- (5) ☐ INITIAL ASSEMBLY
- (6) ☐ SYSTEM TEST
- (7) ☐ FINAL ASSEMBLY
- (8) ☐ RUN ANALYSIS
- (9) ☐ OTHER (SPECIFY)

TEST EQUIPMENT
- (1) ☐ CALIBRATION
- (2) ☐ WEAPON/VEHICLE TEST
- (3) ☐ SELF TEST
- (4) ☐ VISUAL INSPECTION
- (5) ☐ FIN TEST
- (6) ☐ OTHER (SPECIFY)

7. WEAPON/VEHICLE/EQUIPMENT I.D	MK	MOD	REGISTER/SERIAL NO.	8. RUN NUMBER	S/N	9. TORPEDO NALC INCOMING	OUTGOING	10. MOD	11. NEXT SCHEDULED MAINTENANCE
Torpedo	46	5	469841						CLASS "A" ☐ "B" ☐ OSLE ☐

12. TEST EQUIP. ☐ USED ☐ DEFICIENT	MK	MOD	SER. NO	S/N	13. TEST DOC/PROCEDURE ☐ USED ☐ DEFICIENT	VOL.	REV.	CHANGE	PARA/STEP

SECTION III – MATERIAL IDENTIFICATION/ACTION

14. ASSY/FIN NOMENCLATURE	DRAWING NUMBER AND REVISION	REFERENCE DESIGNATOR	SERIAL NUMBER	REPLACEMENT SERIAL NUMBER	15. ORDALT/CHANGE NO	16 N/A	17 S/N	18 F/D	19 JS/CUTABLE	TEST TAPE AND REV	20 FILE CODE/TEST STEP	BLOCK

21. NARRATIVE (1) DESCRIPTION (2) SHOP ACTION (3) RECOMMENDATIONS

(1) Torpedo unserviceable due to bottom fin being chipped (1/4" x 1") and slightly bent. Fin was damaged while sliding torpedo out of #2 tube of Mk 32 SVTT onto Mk 2 Mod 0 loading tray. Fin alignment with tray guide was good, but torpedo hit initial fin guide support. Fin did not clear because lower tray stand was not set low enough to allow sufficient clearance.

(2) None.

(3) a. Offload torpedo during next scheduled ammo offload in August.
b. Extreme care must be taken when sliding fin into tray guides. Loader tray stand should be at lowest point for tubes #2 and #3.

22. REC'D FROM (UIC) ____
SHIP TO (UIC) ____

23. MANHOUR/MATERIAL EXPENDITURES	
MANHOURS	MATERIAL COST

24. REFERENCES/ENCLOSURES

25. NAME OF ORIGINATOR: TM1 [signature]

SUBMITTED DATE (JULIAN): 1 0 4 7

Figure 2-6.—Sample of a completed deficiency report.

Digitized by Google

the NARRATIVE block that this is an updated report. If you submit a report and later find the report should be canceled, submit a new report using the same document number as the original and state in the NARRATIVE block that the original report is to be canceled and the reason why.

RUDTORPE

You may submit a RUDTORPE to informally communicate with the cognizant support groups concerning:

1. Recommendations for improvements in hardware, documents, or procedures
2. Requests for technical assistance or hardware disposition instructions
3. General inquiries

Typical RUDTORPE reports serve to:

1. Recommend improvements in safety, life, interchangeability, performance, material shop equipment, procedure, tests, preservation, and packaging
2. Recommend improvements in the design, performance, and reliability of inservice torpedoes and associated test and support equipment
3. Recommend a revision in procedures and pertinent publications, such as OPs and ODs
4. Highlight supply support problems
5. Provide a medium to accomplish the survey of unsatisfactory, defective, or obsolete equipment and request disposition instructions
6. Fulfill requirements imposed by any instruction that requires the submission of a RUDTORPE. A sample of a completed RUDTORPE is shown in figure 2-7.

The NARRATIVE block of the report is used to describe the RUDTORPE action item and to expand on any elements in the other blocks. You must be careful to avoid entering any classified data. If you check the "OTHER" box in block 4, explain why in this section. In particular, for RUDTORPE submissions, use the NARRATIVE block to define the problem. The explanation should be brief and to the point. This block is most important to NAVSEA field activities whose responsibility will be to investigate the related problem and provide a suitable solution. If for any reason, you require additional space to describe the situation, continue your narration on the reverse side of the form.

IMAs are requested to use the RUDTORPE as an informal communication link between themselves and cognizant support groups. The RUDTORPE is submitted by the IMA for the same reason the organizational level maintenance activities submit it.

Combination Report

A combination report may be made when the equipment being reported on requires that both a deficiency report and a RUDTORPE be submitted. The report must adequately describe the dual situation being reported. The information supplied to the support groups must be clear and complete.

REPORT TYPE, block 3, of the torpedo maintenance data form should be used only when the action item cannot be covered adequately by the deficiency or RUDTORPE report. If the "OTHER" box is checked on the form, specify the type of report and explain the action item thoroughly in the NARRATIVE block.

ORDALT

An ORDALT/change report must be submitted when an IMA completes an ORDALT or a change on a torpedo, torpedo component, or on test/support equipment. ORDALT reporting is not required for test/support equipment that is being reported through the 3-M Systems.

ORDALT accomplishments can be reported in conjunction with a maintenance action. In cases where a maintenance action and an ORDALT are accomplished on the same item, check both the MAINTENANCE and ORDALT/CHANGE boxes in the REPORT TYPE block, block 3 of the Torpedo Maintenance Data Form 8510/5. However, the installation of previously ORDALTed items must not be reported as an ORDALT accomplished.

The activity reporting the ORDALT number in the ORDALT/CHANGE No. block, block 15, must be the activity that actually performed the ORDALT. ORDALT accomplishments performed in conjunction with maintenance actions, and multiple/simultaneous ORDALT accomplishments may be reported on one form providing the ORDALTs are properly matched with applicable ORDALTed serialized items. The instructions in the text of the ORDALT should be strictly

Digitized by Google

TORPEDO MANAGEMENT INFORMATION SYSTEM
TORPEDO MAINTENANCE DATA FORM
(NAVSEA FORM 8510/5)

2. DOCUMENT NO

UNIT ID CODE (UIC)	ACTION JULIAN DATE	ACTION SEQ NO
2 0 5 9 9	2 0 4 8	0 0 1 4

SECTION I – IDENTIFICATION

1. ACTIVITY/SHIP NAME/HULL NUMBER

USS JOHN YOUNG (DD-973)

SECTION II – DESCRIPTION

3. REPORT TYPE
- (1) ☐ MAINTENANCE
- (2) ☐ DEFICIENCY
- (3) ☐ ORDALT/CHANGE
- (4) ☐ LOGISTIC
- (5) ☒ RUDTORPE
- (6) ☐ OTHER (SPECIFY)

4. EQUIPMENT REPORTED ON
- (1) ☒ WEAPON/VEHICLE
- (2) ☐ TEST/SUPPORT EQUIPMENT
- (3) ☐ DOCUMENTATION/PROCEDURES
- (4) ☐ SPARES
- (5) ☐ OTHER (SPECIFY)

5. TYPE OF ACTION
- (1) ☐ WARSHOT TURNAROUND/VERIFICATION
- (2) ☐ PREPARATION/CONVERSION
- (3) ☐ SPECIAL RETURN ACTIONS

MK 46 ONLY
CLASS "A" ☐ "B" ☐

- (4) ☐ EXERCISE (POST FIRING) TURNAROUND

IF EXERCISE TURNAROUND ACTION, ENTER FIRING DATA BELOW

UIC	JULIAN

6. DEFICIENCY FOUND DURING

WEAPON/VEHICLE
- (1) ☐ RECEIPT/DAMAGE INSPECTION
- (2) ☐ DISASSEMBLY INSPECTION
- (3) ☐ COMPONENT TURNAROUND
- (4) ☐ COMPONENT/FIR TEST
- (5) ☐ INITIAL ASSEMBLY
- (6) ☐ SYSTEM TEST
- (7) ☐ FINAL ASSEMBLY
- (8) ☐ RUN ANALYSIS
- (9) ☐ OTHER (SPECIFY)

TEST EQUIPMENT
- (1) ☐ CALIBRATION
- (2) ☐ WEAPON/VEHICLE TEST
- (3) ☐ SELF TEST
- (4) ☐ VISUAL INSPECTION
- (5) ☐ FIR TEST
- (6) ☐ OTHER (SPECIFY)

7. WEAPON/VEHICLE/EQUIPMENT I.D.	MK	MOD	REGISTER/SERIAL NO.	8. RUN NUMBER	S/R	9. TORPEDO NALC INCOMING	OUTGOING	10. MOD	11. NEXT SCHEDULED MAINTENANCE
TORPEDO	46	5	469481						CLASS "A" ☐ "B" ☐ DSLE ☐

12. TEST EQUIP. ☐ USED ☐ DEFICIENT	MK	MOD	SER. NO	S/R	13. TEST DOC/PROCEDURE ☐ USED ☐ DEFICIENT	VOL	REV.	CHANGE	PARA/STEP

SECTION III – MATERIAL IDENTIFICATION/ACTION

14. ASSY/FIR ITEM/PART	DRAWING NUMBER AND REVISION	REFERENCE DESIGNATOR	SERIAL NUMBER	REPLACEMENT SERIAL NUMBER	15. ORDALT/CHANGE NO	16 R/I	17 S/R	18 F/D	19 JB/CUTABLE	TEST TAPE AND REV	20 FILE CODE/ TEST STEP	BLOCK

21. NARRATIVE (1) DESCRIPTION (2) SHOP ACTION (3) RECOMMENDATIONS

1. EXERCISE UNIT RECEIVED ON 6 JUN WITHOUT THE TORPEDO RECORD BOOK. PREPARATION ACTIVITY WAS USS NEVERSAIL (AD-84). UNIT WAS STORED AT NAS TIMBUCKTOO, CA FROM 27 JUL 78 TO 5 JUNE 79.

2. NONE

3. REQUEST NEW RECORD BOOK BE PROVIDED.

22. REC'D FROM (UIC) ☐☐☐☐☐
SHIP TO (UIC) ☐☐☐☐☐

23. MANHOUR/MATERIAL EXPENDITURES	
MANHOURS	MATERIAL COST

24. REFERENCES/ENCLOSURES

25. NAME OF ORIGINATOR TM1 Larry Smith USN

SUBMITTED DATE (JULIAN) 3 0 4 8

Figure 2-7.—Sample of a completed RUDTORPE.

Digitized by Google

FROM:	SURFACE SHIP
TO:	RANGE
	INTENDED POST RUN IMA
	TARGET SUB
INFO:	NAVOCEANSYSCEN
	FLEET COMMANDER
	TYPE COMMANDER
	OPERATIONAL COMMANDER
I.	FIRING SHIP INFO
A.	FIRING DATE/TIME
B.	FIRING ACTIVITY (SHIP OR LAMPS)
C.	IF LAMPS, AIRCRAFT SIDE NO. AND BUNO
D.	LAUNCH METHOD (IF NOT LAMPS)
E.	FIRING LOCATION, LAT/LONG OR RANGE NAME
II.	TORPEDO INFO
A.	TORPEDO MK/MOD/REG.NO./NALC
B.	STABILIZER MK/MOD AND SER.NO. (LAMPS OR ASROC)
C.	ISD/MODE/CEILING, CIRCLE OR SNAKE AND GYRO ANGLE
D.	SUSPENSION BAND CONTR. AND LOT NO. (LAMPS ONLY)
III.	TACTICS AND ENVIRONMENT
A.	TYPE EXERCISE
B.	FIRING TACTICS
C.	COURSE/SPEED/ALTITUDE (IF LAMPS)
D.	ATTACK CRITERIA MET (LAMPS ONLY)
E.	ARMING WIRE RETAINED (TUBE OR LAMPS)
F.	MULTIPLE FIRING
	1. NUMBER RUNNING
	2. REGISTER NUMBERS
G.	SEA STATE
H.	WATER DEPTH
I.	LAYER DEPTH
IV.	TARGET INFO
A.	TARGET SUB HULL NO. OR ART.TGT.MK/MOD
B.	TARGET COURSE/SPD/DEPTH AND BEARING/RANGE AT TOF
V.	TORPEDO PERFORMANCE AND RECOVERY
A.	RUN EVALUATION/NARRATIVE
B.	RECOVERED
C.	SEARCH TIME
D.	IF LOST, SEARCH CRAFT(S)
E.	IF LOST, VISIBILITY
F.	IF LOST, WAS TORPEDO SEEN AT EOR
G.	IF LOST, TORP SHUTDOWN/LEAD WEIGHT DUMP HEARD
H.	IF LOST, TORP IMPLOSION HEARD

Figure 2-8.—Torpedo Rapid Feedback System's message format.

Digitized by Google

adhered to for identifying the ORDALT application. It is not enough to report that an ORDALT was accomplished; the torpedo register number, part name, and serial number, where applicable, must also be given.

RAPID FEEDBACK SYSTEM

The Mk 46 Torpedo Rapid Feedback System eliminates the requirements for reporting Mk 46 torpedo firings via the Firing Report Form 8510/9. The rapid feedback system is based on the timely exchange of up to four messages between all participants in a Mk 46 firing exercise. Participants can include the firing ship or aircraft, a 3-D range, a target submarine, and the postrun IMA. The firing ship must issue a message as shown in figure 2-8 within 24 hours after firing a torpedo.

The IMA is responsible for the most significant item in the rapid feedback system; the message to be submitted after doing a postrun turnaround. The postrun IMA should submit the new message within 5 working days after receiving the torpedo in the shop. The message format for the IMA is shown in figure 2-9.

FROM:	IMA
TO:	USS UNDERWAY (OR VP-00, VS-00, HS-00, HSL-00)
	RANGE
	TARGET SUB
INFO:	NAVOCEANSYSCEN
	FLEET COMMANDER
	TYPE COMMANDER
	OPERATIONAL COMMANDER
I.	TORPEDO INFO
A.	TORPEDO MARK/MOD/REG.NO./NALC
B.	ISSUE AND PREP ACTIVITY
C.	TORPEDO FLOOR AND DEPTH CUT-OFF
D.	TORPEDO FIRING DATE/TIME
E.	PREVIOUS FIRING DATE
F.	TOTAL FIRINGS SINCE CLASS B.
G.	LAST CLASS B OR POST RUN MAINT/DATE/ACTIVITY
H.	OTHER TORPEDO MAINT.AFTER ITEM G./TYPE/DATE/ACTIVITY
I.	WARSHOT TO EXERCISE CONVERSION/DATE/ACT
J.	EXERCISE HD/MARK/MOD/SER.NO.
II.	FILM DATA
A.	ISD/MODE/CEILING/CIRCLE OR SNAKE
B.	ACQUISITION
C.	ACQUISITION RANGE
D.	A RANGE
E.	B RANGE
F.	TURNAWAY
G.	COUNTERMEASURES SEEN/TYPE/NO.OF ATTACKS
H.	RUN TIME (SEC)
I.	TORPEDO SPEED
III.	TORPEDO EVALUATION
A.	RUN EVALUATION
B.	IF FAILURE, GIVE CAUSES
C.	WATER IN TORPEDO, LOC./AMT.
D.	RECOVERY DAMAGE
E.	COMMENTS

Figure 2-9.—Message format for IMAs.

Digitized by Google

From: _____
(IMA/PREP ACTIVITY)

TO: Firing Activity

Preparation Data for Mk 46 Exercise/ Warshot Firing

A. Torpedo/Mk/Mod/Register No./NALC
_____

B. Stabilizer Mk/Mod/Ser No.
_____

C. Suspension Band Contr and Lot No. for Air Launch _____

D. Intended Postrun Activity (IMA)
_____

Figure 2-10.—Data sheet.

Additionally, when issuing a torpedo for a firing, the IMA/preparation activity must complete a data sheet as shown in figure 2-10.

INTERMEDIATE LEVEL MAINTENANCE MK 46 TORPEDO

Your intermediate maintenance will include complete systems tests, inspections, and tests and adjustments of individual major assemblies or sections that comprise the weapon or equipment.

Maintenance functions you will perform on torpedoes at the intermediate level consist of disassembly, checkout of FIR items; assembly of the major torpedo sections, as specified in technical manuals; disassembly and testing of sectional components; fault isolation of FIR components or expendable items; replacement of faulty FIR components or replacement items; fueling and overall functional testing of complete units; external and internal flushing, and ORDALT incorporation and verification. Faulty FIR components are returned to a depot level facility for repair.

Maintenance of the torpedo workshop equipment (including automatic test equipment) at the intermediate level is performed by fleet personnel with assistance from contractor personnel when necessary. Your maintenance will consist of fault isolation to the component level and subsequent component replacement. Defective components that are repairable are sent to a depot facility for maintenance.

Intermediate level maintenance is performed at fleet torpedo shops by personnel trained in the disassembly, reconditioning, repair, testing, and assembly of torpedoes. FIR assemblies are removed from the torpedo, but are not repaired at this level.

General Maintenance Information

Torpedo assemblies and components (afterbody, afterbody/fuel tank, exercise head, and warhead) that contain explosives or pyrotechnic devices must be connected to an ordnance ground at all times to protect against accidental detonation by electromagnetic radiation or electrostatic discharge. When maintenance is performed, a grounding bolt must be installed in the afterbody seawater inlet port and connected to an ordnance ground. The torpedo must remain grounded during all maintenance actions.

Before you remove any part of an assembled torpedo, the fuel tank, afterbody, exercise head, warhead, and nose section must be vented. Venting equalizes internal pressure with that of the atmosphere. Internal pressure may build up as a result of changes in temperature or elevation. Internal pressure may force sections apart, causing injury to personnel or damage to the weapon. If the internal pressure is below atmospheric pressure, separation of torpedo sections is very difficult or impossible. When removing vent plugs or screws, do not allow any part of your body to be in a direct line with these components. A malfunction in the pressurization or fuel system could forcibly eject the plug or screw or discharge fuel. When releasing pressure from the fuel tank, protect your eyes from possible spray of fuel from the vent valve. A malfunction in the pressurization system could cause the fuel tank to be under high pressure. Bleed all pressure from the tank before you proceed with disassembly.

The forward portion of the torpedo nose section houses the sonar transducer enclosed by a black neoprene diaphragm. During all operations, you must protect the transducer diaphragm from damage. Whenever possible, keep a protective cover installed on the nose section. Nicks, cuts, or scratches in the diaphragm will have a detrimental effect on torpedo operation. Severe blows to the nose section can destroy the transducer elements, making the torpedo guidance system inoperative. You must

Digitized by Google

not permit grease, oil, wax, or other lubricants to come in contact with the diaphragm. If this should happen, immediately wash the diaphragm thoroughly with water and liquid detergent. Any contaminant on the diaphragm surface will adversely affect torpedo performance.

The Mk 103 warhead contains a high-energy explosive. Do not drop or subject the warhead to rough treatment that may cause detonation. If a warhead is dropped, an Explosive Incident Report must be submitted, in accordance with OPNAV Instruction 5102.1, with a request for disposition to Naval Sea Systems Command and a copy of the report to Naval Ocean Systems Center. Although the explosive is relatively unaffected by shock or temperature change, it must be handled in strict accordance with instructions contained in NAVSEA OP 5.

The Mk 20 Mod 0 exploder contains an explosive booster charge capable of causing serious injury. When handling the exploder, always point the booster away from your body, other personnel, and equipment. Inspect the exploder safe-armed indicator. The letter "S" must be displayed on a green background in the safe-armed indicator window. If the letter "A" or any red background is displayed, the exploder is considered armed and dangerous. If the exploder becomes armed before installation, after removal, or while it is being installed in the torpedo, it can be rendered electrically safe by rotation of the sterilization switch to the RECOVER POSITION. This can be accomplished with a nonferrous screwdriver. Once the sterilization switch has been actuated to the RECOVER position, it cannot be returned to the NORMAL position. The exploder must be returned to a repair depot.

You must protect the exploder from electrostatic discharge in accordance with Navy regulations and procedures. Do not install the exploder in a warhead unless the exploder well test has been performed and the firing circuit is proved safe. A malfunction in the torpedo could detonate the exploder and warhead prematurely.

In preparation for disassembly, you should place the torpedo on two universal dollies (fig. 2-11). The afterbody should rest on the dolly with the afterbody adapter and tailcone saddle. The fuel tank and forward sections of the torpedo should rest on the dolly with the cylinder adapter. The fuel tank fill port and vent port must be facing upward.

You must install a propeller guard on the afterbody to prevent damage to the propellers and injury to personnel. If the torpedo is an exercise configuration, install a safety strap around the exercise head to restrain the lead droppers. After removal of the joint rings, use a separation fixture to separate the torpedo into sections. You may use a separation fixture with one person on each side, then pick up and spread the handles to retract the friction shoes. Place the separation fixture on the torpedo, with the joint to be separated approximately centered between the handles. With each person coordinating their movements with the other, technicians bring the handles together until the torpedo sections separate. If the friction shoes slip during the separation, they can be adjusted to grip more tightly. Care must be exercised when adjusting the cam bushings, to ensure that the shoes do not grip more than necessary. Extreme pressure could deform the torpedo, cause binding, and make future separation more difficult.

To increase the acquisition capability of the torpedo and to expand the testing capability of the Mk 540 test set, Complimentary Metal Oxide Semiconductor (CMOS) components are used extensively in the Mk 46 Mod 5 torpedo and in the Mk 540 test set. These components greatly increase electronic density; however, they are extremely sensitive to electrostatic discharge (ESD). To protect the ESD sensitive components from damage, it is necessary to maintain all working surfaces and operating personnel at a known ground plate potential to prevent the buildup of a static charge that could cause injury to personnel or damage to components if a discharge should occur.

To achieve the ground plate potential, personnel and working surfaces must be isolated from the facility's ground through a resistance of 1 megohm. This will protect personnel if they should inadvertently come in contact with a voltage source that could cause injury. Protective matting on the floor and on bench tops where components are handled quickly bleeds off the static charge of an individual. The matting must be isolated from the ordnance ground through a 1-megohm resistor. Wrist straps are used to discharge the static potential of a person, and to ensure that the individual and the electronic component being handled are at the same potential. The wrist straps are connected to ground terminals located along workbenches. A 1-megohm series resistance is incorporated into the wrist straps. This resistance is sufficient to provide personnel protection from potential shock hazards, and are

Digitized by Google

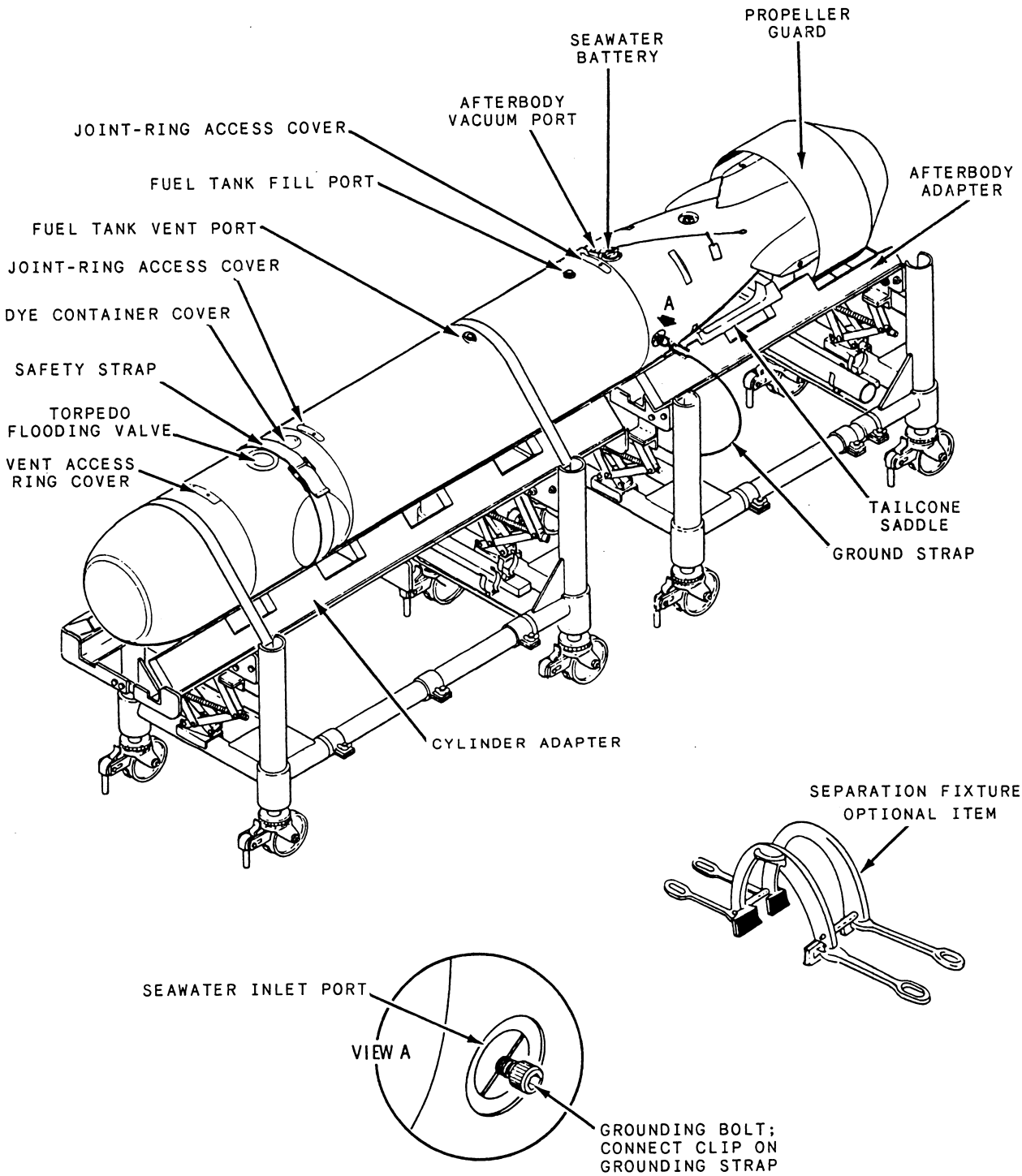

Figure 2-11.—Mk 46 torpedo (exercise) on universal dollies.

Digitized by Google

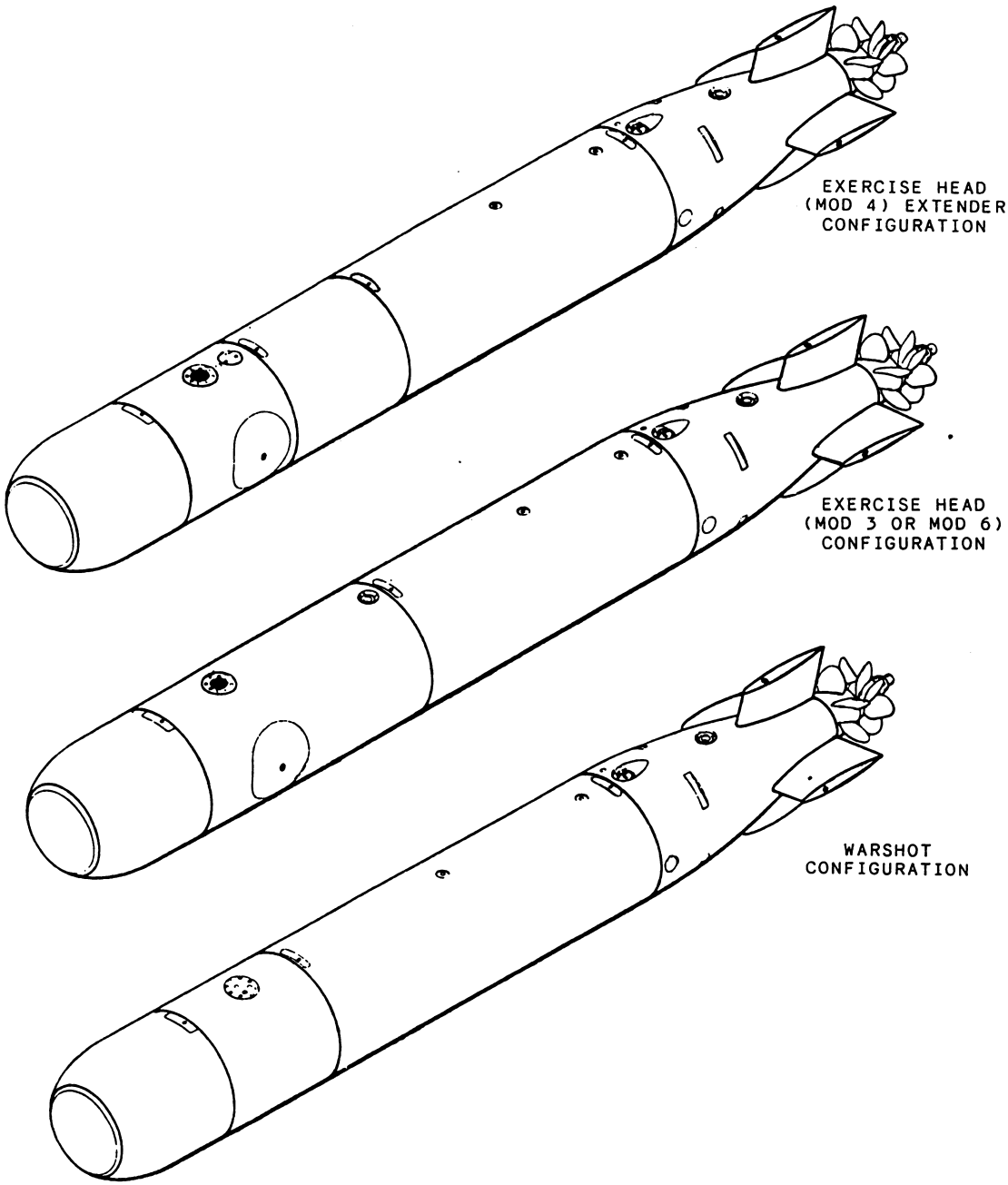

Figure 2-12.—Mk 46 torpedo.

sufficiently low enough to protect equipment components.

TORPEDO CONFIGURATIONS

The Mk 46 Mod 5 torpedo can be assembled into three principal configurations (fig. 2-12) as follows:

1. Exercise head (Mod 4) extender. The configuration (used by fleet personnel for training) consists of a nose section, Mk 85 Mod 4 exercise head, positive buoyancy section, control group, short fuel tank, and an afterbody section.
2. Exercise Head (Mod 3 or Mod 6) . This configuration (used on the Atlantic Undersea Test and Evaluation Center [AUTEC] ranges for training) consists of a nose section, Mk 85 Mod 3 or Mod 6 exercise head with an integral extender, control

Digitized by Google

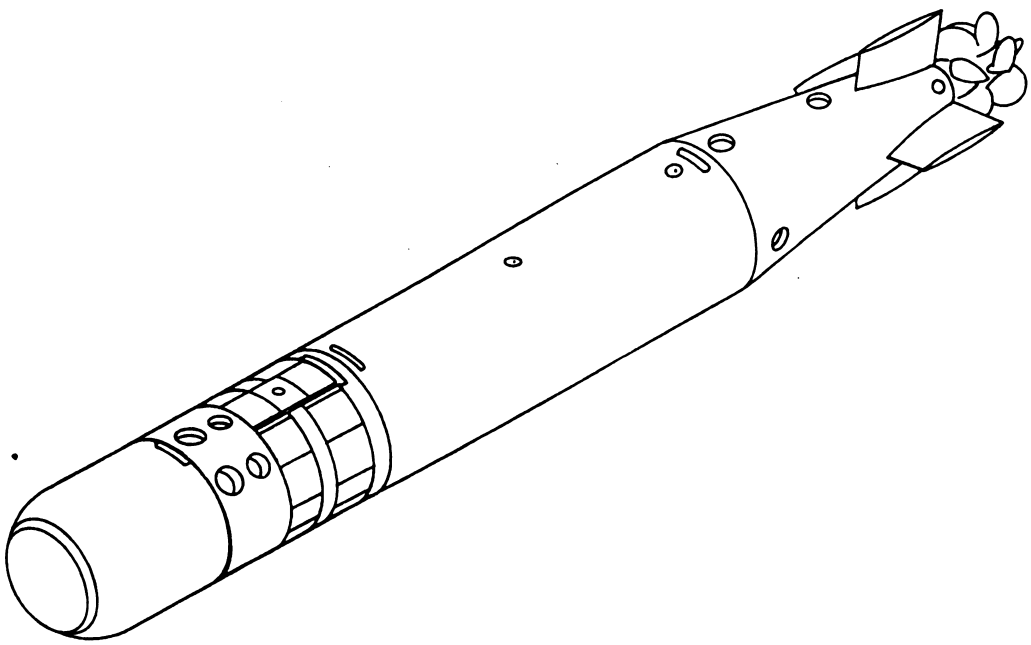

Figure 2-13.—Recoverable exercise torpedo (REXTORP) Mk 46.

group, short fuel tank, and an afterbody section.

3. Warshot. This configuration consists of a nose section, warhead, control group, long fuel tank, and an afterbody section.

An additional configuration that you should be aware of is the recoverable exercise torpedo (REXTORP). It is an inert, presettable exercise torpedo that is recoverable following the release of 180 pounds of lead ballast. The unique REXTORP identification characteristics include an orange nose, a ballast section with a blue stripe, and an external ballast weights/strap assembly. The REXTORP is shown in figure 2-13, and consists of a nose section, ballast section, short fuel tank shell, afterbody, and rotating propellers.

Table 2-2 lists the torpedo components in three different categories: FIR components, separable and interchangeable items, and expendable items requiring replacement or replenishment after a sea run.

The warhead, exploder, explosive bolts, propellant assembly, and igniter contain explosive material. Any of these components that have not been expended must be inspected for reuse (components of a torpedo that has misfired must not be reused). Components that are damaged or were part of a misfired torpedo must be forwarded to an explosive ordnance disposal (EOD) team for disposal, or packaged for shipment in accordance with NAVSEA Instruction 4440.14. Otto Fuel II removed from fuel tanks during postrun maintenance must be disposed of in accordance with instructions contained in NAVSEA S6340-AA-MMA-010. Fuel removed during Class B maintenance may be used for exercise firings.

You will perform two types of maintenance on the Mk 46 torpedo at IMAs—postrun turnaround maintenance and periodic maintenance. Postrun turnaround maintenance involves the preparation of the torpedo, after a sea run, for an exercise sea run (training and evaluation), and a warshot, or for stowage. Periodic maintenance consists of Class B maintenance. All maintenance must be done according to procedures contained in the applicable technical manual.

POSTRUN TURNAROUND MAINTENANCE

When you receive a torpedo for postrun turnaround maintenance, it must be inspected for corrosion and damage. The inspection procedures in the technical manual SW515-A5-MMI-030/(U)MK 46 MOD 5, Vol. 4, must be followed. The dye container or the luminous dye should have been removed from the dye-pot well during torpedo recovery operations. However, if a dye container is in the dye-pot well, the container must

Digitized by Google

Table 2-2.—Torpedo Components

NOMENCLATURE	FUNCTIONAL ITEM REPLACEMENT COMPONENTS (FIR)	SEPARABLE AND INTERCHANGEABLE ITEMS	EXPENDABLE ITEMS
Torpedo Mk 46 Mod 5			
. Nose Section			
. . Transducer	X		
. . Guidance Group Assembly			
. . . Transmitter A2	X		
. . . Receiver A3	X		
. . . Forward Cap Assembly		X	
. Control Group Assembly, A6			
. . Control Group	X		
. . . Course Gyroscope	X		
. Fuel Tank (Warshot)			
. . Fuel Tank Cable		X	
. . Tube Assembly		X	
. . Fuel Interlock Valve		X	
. . . Fuel Interlock Valve Disk			X
. . Pressure Cylinder			X
. . Pressure Regulator		X	
. Afterbody			
. . Steering-Control Actuator	X		
. . . Fins		X	
. . . Forward Yoke		X	
. . . Aft Yoke		X	
. . Positive Displacement Engine		X	
. . . Piston		X	
. . . Valve Seat			X
. . . Valve			X
. . . Vent			X
. . Propellers and Seal		X	
. . Accessories Bulkhead Assembly		X	
. . . Seawater Pump		X	
. . . Fuel Pump		X	
. . . Two Speed Valve		X	
. . . Alternator/Rectifier	X		
. . . Combustion Chamber	X		

Digitized by Google

Table 2-2.—Torpedo Components—Continued

NOMENCLATURE	FUNCTIONAL ITEM REPLACEMENT COMPONENTS (FIR)	SEPARABLE AND INTERCHANGEABLE ITEMS	EXPENDABLE ITEMS
. Afterbody (Cont)			
. . . Disc Seal			X
. . . Gas Seal			X
. . Seawater Battery			X
. . Igniter			X
. . Propellant			X
. . Afterbody Cable		X	
. . Exhaust Valve		X	
Warhead			
. Warhead Mk 103 Mod 1			
. Exploder Mk 20 Mod 0			
Exercise Head Mk 85 Mod 3, Mod 4 or Mod 6			
. Instrumentation Cable		X	
. . Battery Assembly			X
. Exercise Head Cable		X	
. Logic Assembly	X		
. . Turnaway Board	X		
. Pressure Assembly		X	
. Oscillograph	X		
. Instrumentation Assembly	X		
. Lead Droppers			X
. Dye Container			X
. Explosive Bolts			X
. Film			X
. Digital Data Recorder	X		
. . Torpedo Flooding Valve		X	
Short Fuel Tank (Exercise (Mod 4) Extender or Exercise (Mod 3) Torpedo)			
. Fuel Tank Cable		X	
. Tube Assembly		X	
. Baffle Compartment Assembly		X	
. Fuel Interlock Valve		X	
. . Fuel Interlock Valve Disk			X
. Pressure Cylinder			X
. Pressure Regulator		X	
Positive Buoyancy Section (Exercise (Mod 4) Extender Torpedo Only)			

Digitized by Google

be removed and discarded. Residual dye in the well must be flushed out with fresh water.

During the inspection, you must verify that the torpedo flooding valve (fig. 2-11) is intact. If the valve is actuated, install a rubber stopper (size 00). At the completion of the inspection, rinse the torpedo thoroughly with fresh water.

The torpedo fuel tank, afterbody, and exercise head must be vented before the torpedo is disassembled.

Release the fuel tank pressure by carefully removing the high pressure cap from the vent plug in the fuel tank vent port and install vent and cap tool to release the pressure in the fuel tank (fig. 2-11). If the torpedo contains a large amount of fuel, the carbon dioxide in the fuel will cause a continuous buildup of pressure until the torpedo is defueled.

Internal pressure is equalized in the afterbody by removal of the afterbody vacuum port plug (fig. 2-11). Internal pressure in the exercise head is equalized by removal of the head section vacuum port plug (plug is not shown in figure 2-11 because the port is located under the safety strap and between the torpedo flooding valve and dye pot). The person who removes the vacuum plugs must have eye protection to guard against water or dust that may be discharged from the vent port.

The seawater battery (fig. 2-11) must be removed and discarded. The battery will continue to react and supply current for approximately 24 hours after it is exposed to seawater. A used seawater battery must not be resealed or confined within a pressure-tight container. When the battery is being removed from the torpedo, care must be exercised to prevent seawater in the battery from entering the afterbody shell.

Water should be removed from the joint-ring access area before the torpedo is disassembled. After the access cover (fig. 2-11) and joint-ring spacers are removed, low-pressure air should be used to blow out the joint-ring area. If the coolant passages of the torpedo are not flushed through the seawater inlet port after recovery, and the torpedo will not have maintenance within 24 hours after recovery, use the flushing procedures listed in technical manual SW515-A5-MMI-030/(U) MK 46 MOD 5.

Your first step in torpedo disassembly is the removal of the nose section from the exercise head, Mod 3, 4, or Mod 6, so that the torpedo run film can be removed, developed, and analyzed before the torpedo is further disassembled. Torpedoes containing a Mod 6 head has to be run on the Mk 641 if a malfunction in the propulsion system is indicated on the film or data printout. Troubleshooting should start with the testing of the performance of the assembled torpedo.

If the film or data printout indicates a good run with no malfunctions, the torpedo must be disassembled and each section must be given required postrun turnaround maintenance.

Defueling the Torpedo

You must remove the fuel from the fuel tank by following the procedures contained in technical manual SW515-A5-MMI-030/(U)MK 46 MOD 5. Since Otto Fuel II presents a hazard to personnel, applicable guidelines must be followed for all operations involving fuel handling.

Procedures that must be followed for the cleanup of spills and leaks and all workshop and storage requirements for facilities are contained in technical manual *Otto Fuel II Safety, Storage,* S6340-AA-MMA-010, and applicable handling instructions.

At least two qualified persons are required to defuel the torpedo. They must be thoroughly familiar with precautions to prevent direct skin contact, ingestion, and inhalation. They must also be capable of rendering aid if contamination does occur.

Never position yourself between the fuel-vapor source and local ventilation exhaust during any operation involving Otto Fuel II. The vapors could be drawn into your breathing zone. The following safety precautions for Otto Fuel II must be posted at all sites where Otto Fuel II is handled.

Safety Precautions:

1. All operating personnel must be familiar with the nature and characteristics of Otto Fuel II.
2. Operations involving Otto Fuel II must be performed by two or more persons.
3. Good housekeeping practices must be observed.
4. Food and tobacco are not permitted in operating areas.
5. Water supply, safety showers, eyewash fountain, emergency breathing air, and personal protective equipment must be AVAILABLE, AND THEY MUST BE INSPECTED PERIODICALLY PRIOR TO OPERATIONS INVOLVING Otto Fuel II.
6. Spills must be avoided since arduous cleanup and decontamination procedures are required if spills occur.
7. Positive pressure air breathing equipment must be used when entering an

Digitized by Google

area containing a large concentration of Otto Fuel II vapors, such as those resulting from a gross spillage, or an inoperative local exhaust ventilation system.

8. Otto Fuel II must not be flushed into common drainage systems.
9. Otto Fuel II is a monopropellant and contains its own oxidizer. The most efficient method of extinguishing fires is the use of a finely dispersed water fog, but carbon dioxide fire extinguishers can be used on small Otto Fuel II fires.
10. Otto Fuel II must be stored alone and not with other fuel or oxidizers.

Hazards:

1. Toxic effects may occur from absorption of Otto Fuel II through direct skin contact or inhalation of its vapors.
2. Ingestion may result in death or, at least, cause severe disorders of the gastro-intestinal tract, mucosa, and mucous membranes.

First Aid:

1. Personnel that have been overexposed to Otto Fuel II should be removed from the contaminated area and placed in an area that has fresh air. If symptoms persist, medical aid should be obtained.
2. In the event of spills, contaminated clothing must be immediately removed and contaminated skin areas must be washed thoroughly with soap and water. (Never use solvents to cleanse Otto Fuel II from the skin.)
3. If Otto Fuel II is ingested, induce vomiting. NEVER induce vomiting in an unconscious person. Apply artificial resuscitation if breathing has stopped. Have someone else obtain medical aid.
4. If Otto Fuel II has splashed into your eyes, flush them immediately with quantities of potable water or saline solution.
5. Fresh air and a cup of hot black coffee generally alleviate the headache pain resulting from the vapor inhalation.

NOSE SECTION.—Maintenance of the nose section (fig. 2-14) includes removal of the guidance unit, and cleaning and inspection of the nose section, transducer, and guidance unit. The procedures given in technical manual SW515-A5-MMI-030/(U) MK 46 MOD 5 must be followed. The manual also contains procedures

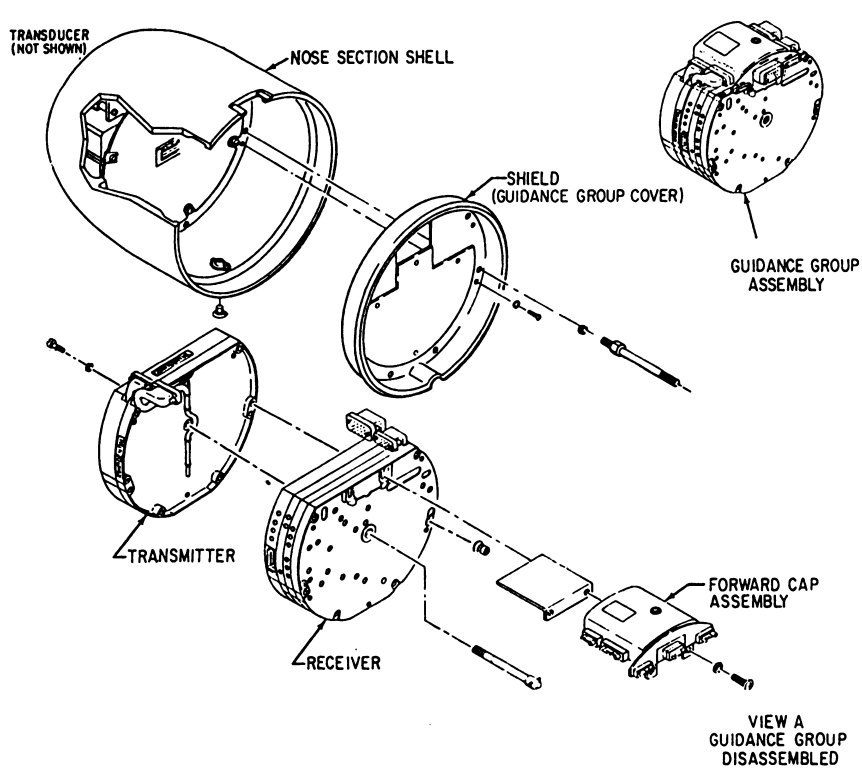

Figure 2-14.—Nose section.

Digitized by Google

for making authorized repair and replacing damaged components. The nose section and transducer must be replaced if an inspection reveals the following discrepancies:

1. Cracks or other defects in the nose section shell deeper than 1/32-inch or longer than 2 inches.
2. The transducer diaphragm edge cannot be separated from the aluminum diaphragm ring by more than 1/32-inch (the ball of the thumb is used to force a separation).
3. Gouges, slits, or cracks that extend through the diaphragm, or are more than 1/16-inch deep over the transducer array aperture, or more than 1/16-inch deep over the area bonded to the nose section shell.

The guidance unit must be checked for loose or broken wires, damaged connectors, corrosion, broken or dented parts, missing or broken hardware, and discolored or charred components. The transmitter and receiver of the guidance unit are FIR components. If damaged, the components must be returned to NUWES, Keyport, Washington, for depot level maintenance.

The transducer (nose section shell included) is also a FIR component and must be returned for depot maintenance if it is damaged and cannot be repaired by following the maintenance procedures authorized at the IMA level.

Exercise Head

Maintenance of the Mk 85 Mods 3, 4, and 6 exercise heads figs. 2-15, 2-16, and 2-17, is done

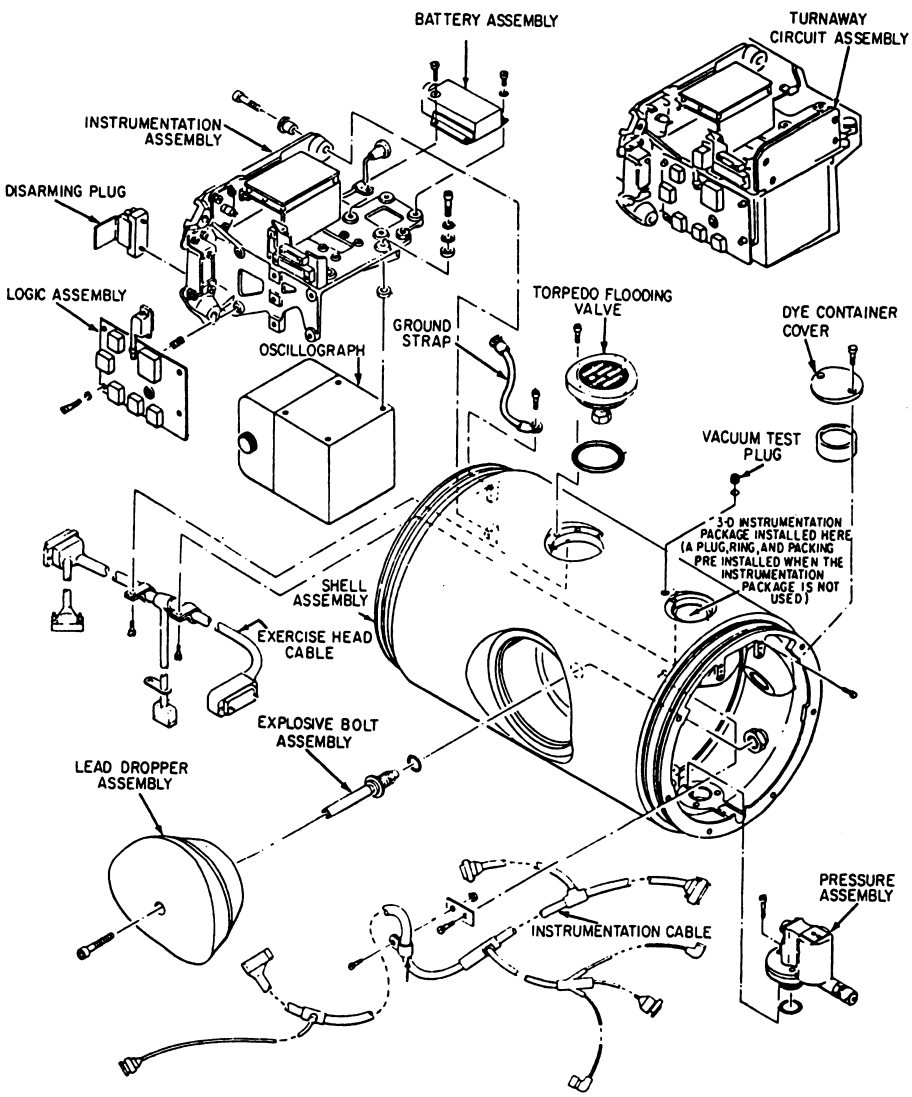

Figure 2-15.—Mk 85 Mod 3 exercise head.

Digitized by Google

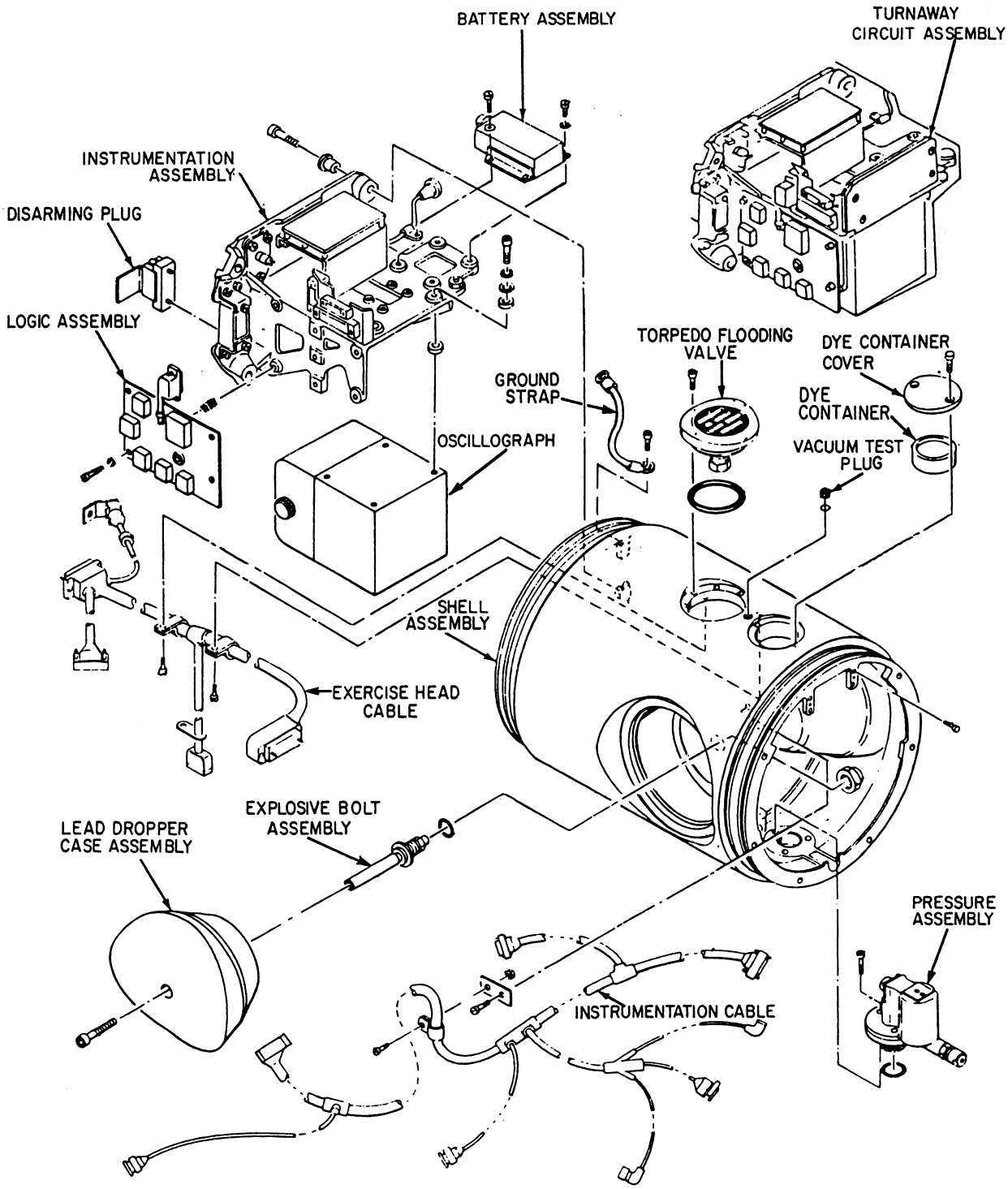

Figure 2-16.—Mk 85 Mod 4 exercise head.

Digitized by Google

after each exercise run. Maintenance includes disassembly, cleaning, inspection, parts replacement, adjustments, reassembly, and testing. Procedures for doing the maintenance are listed in SW515-A5-MMI-120/(U)MK 46 MOD 5. Figure 2-18 lists the required maintenance for the exercise head, and the order of accomplishment.

If the exercise head is not used within 60 days after maintenance, the functional test must be performed before the head can be used.

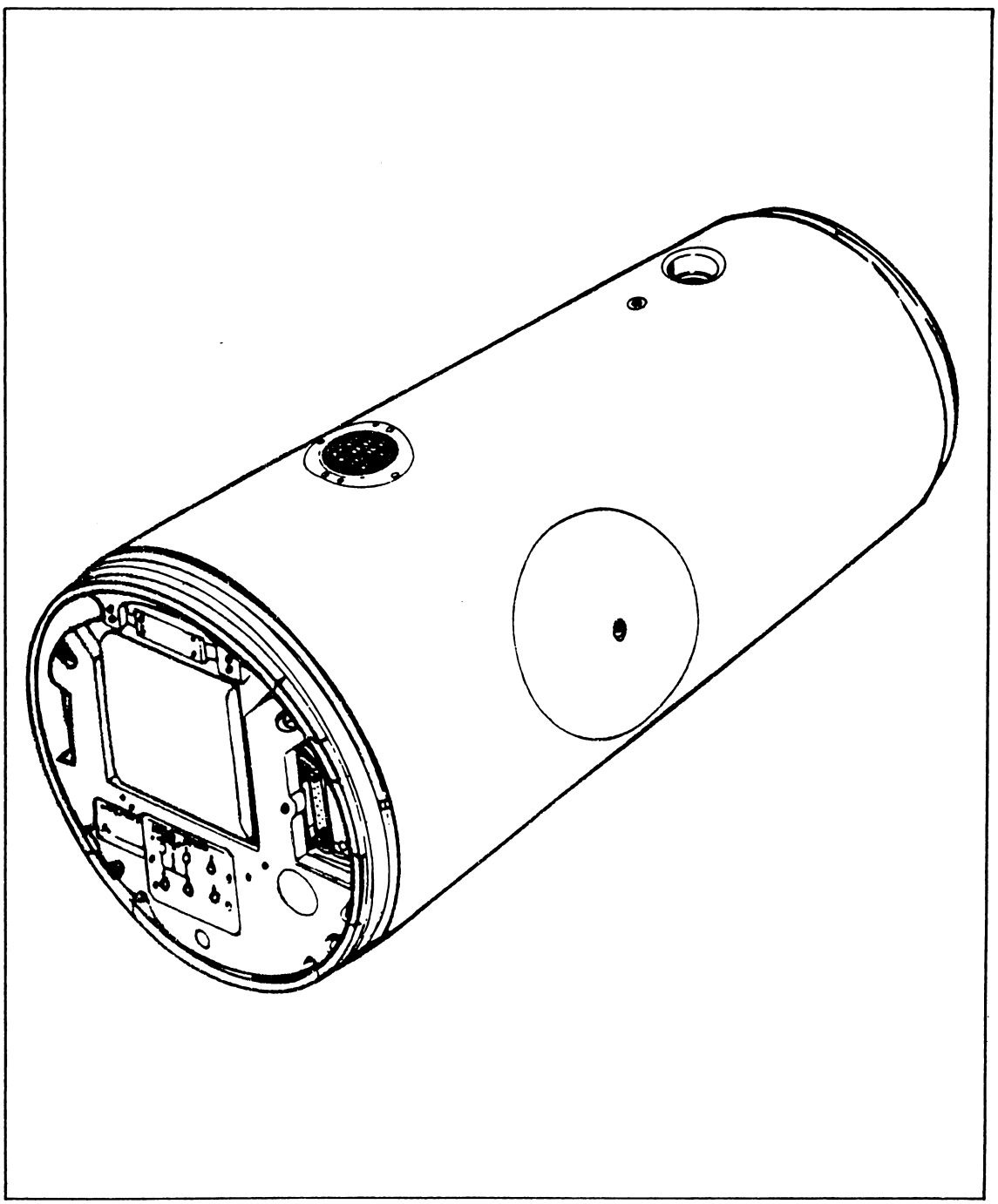

Figure 2-17.—Mk 85 Mod 6 exercise head.

Digitized by Google

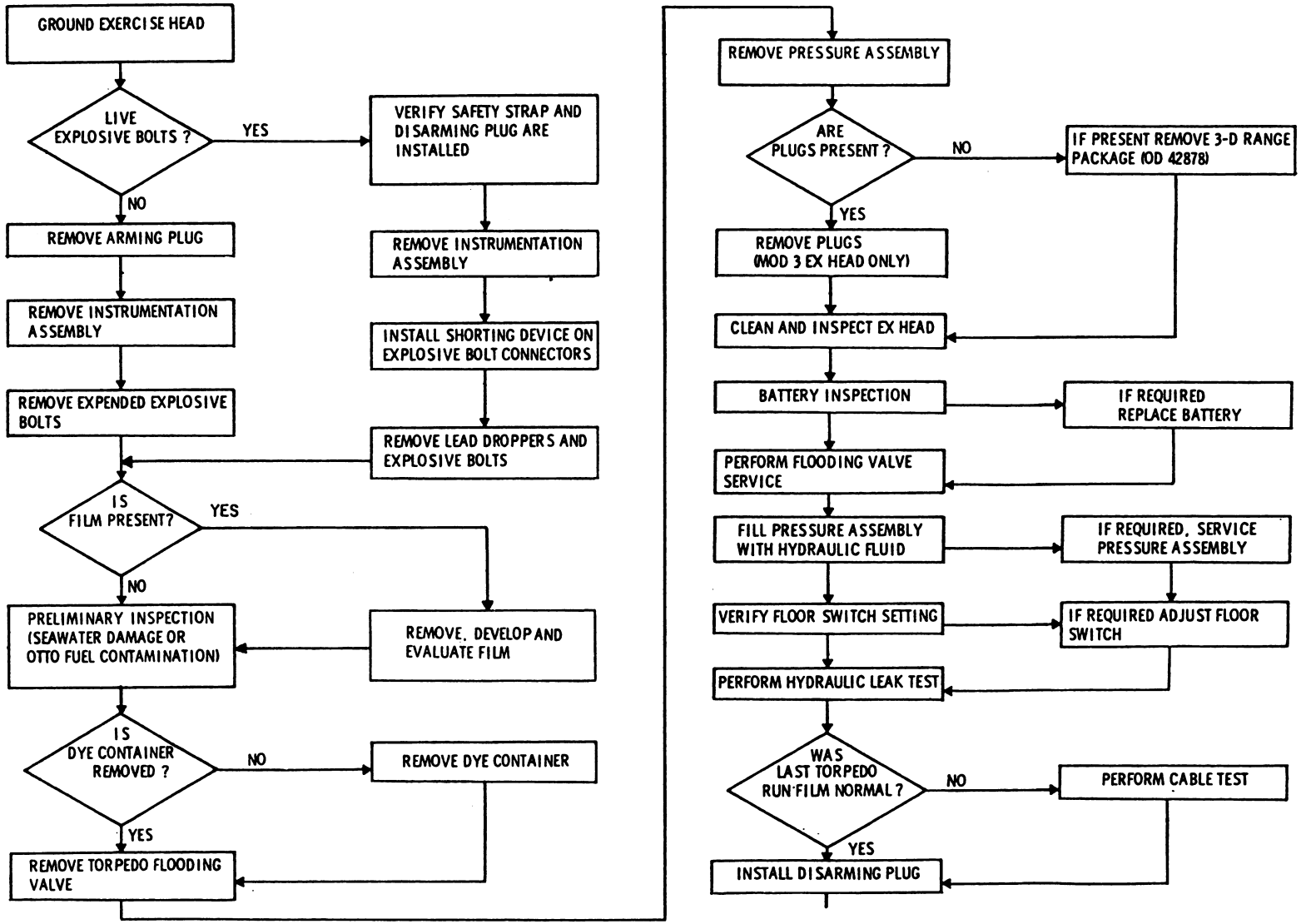

Figure 2-18.—Maintenance flow diagram for the exercise head.

Digitized by Google

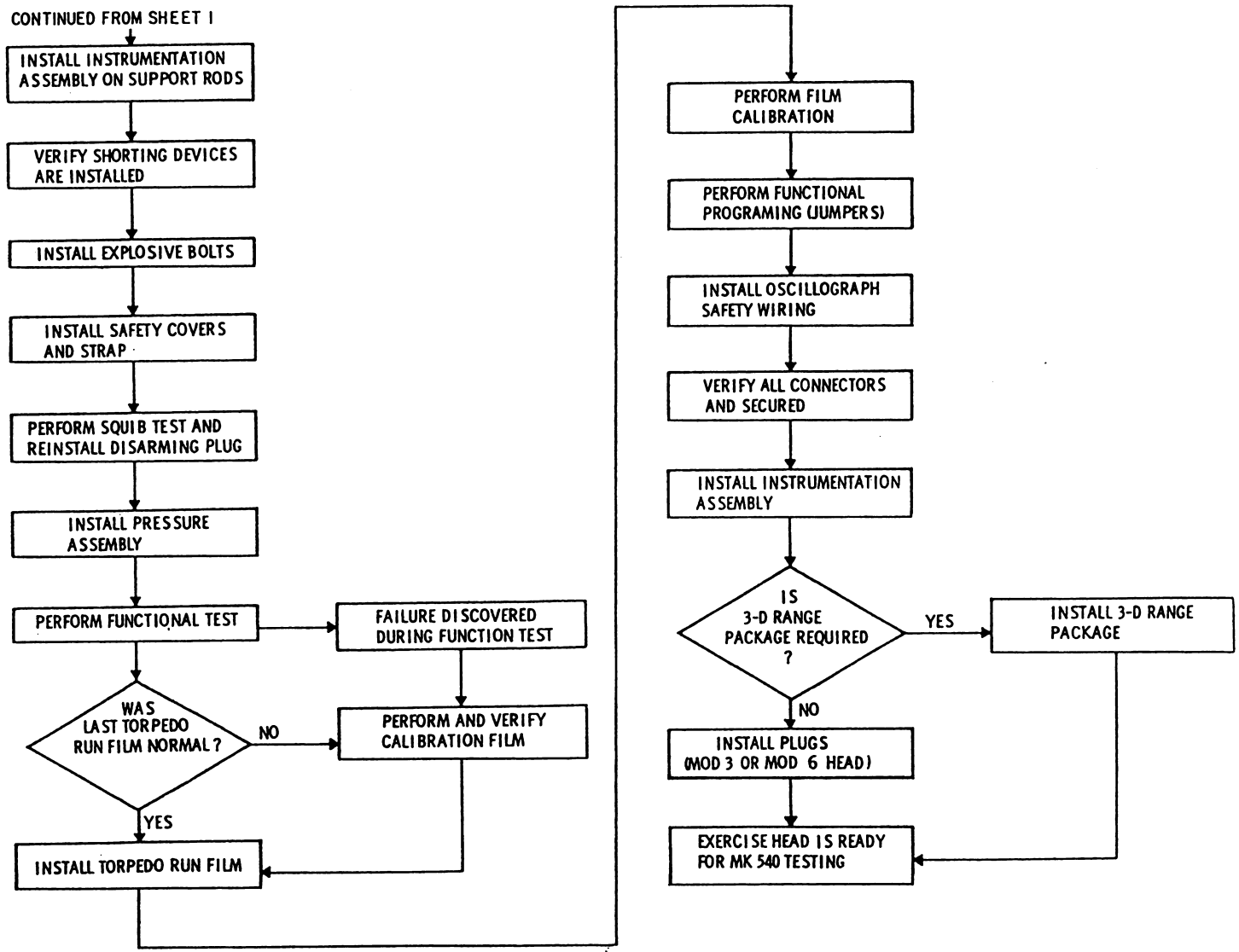

Figure 2-18.—Maintenance flow diagram for the exercise head—Continued.

Digitized by Google

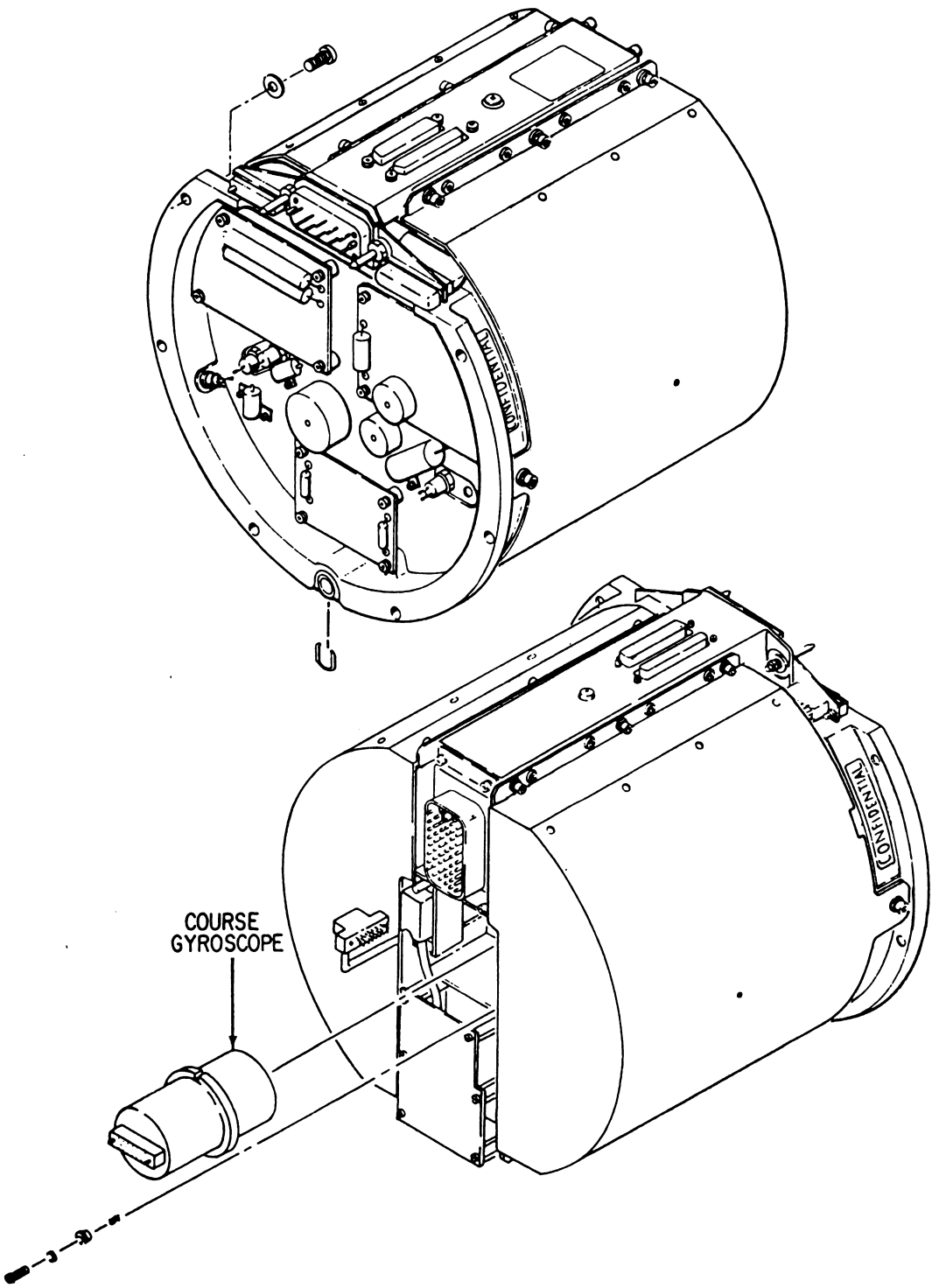

Figure 2-19.—Control group.

Digitized by Google

Control Group Assembly

The control group assembly consists of the control group and course gyroscope (fig. 2-19). Both parts are FIR components. Postrun turnaround, class B maintenance of the control group consist of the same functions. Two types of maintenance actions are performed on the course gyroscope: postrun turnaround and class B. The latter consists of periodic maintenance inspections.

The control group assembly is tested as a unit and is not disassembled to the individual component level. The course gyroscope must be removed, caged, wound, and tested, and is not reinstalled until control group testing has been completed.

Figure 2-20 is a diagram showing turnaround maintenance that must be performed on the control group assembly. Technical manual SW515-A5-MMI-140 contains procedures for doing the maintenance.

Positive Buoyant Section

The positive buoyant section is used only when the Mk 85 Mod 4 exercise head is used in the exercise torpedo configuration. The positive buoyant section shell must be inspected for corrosion, nicks, dents, burrs, or scratches. Acceptable defects are scratches not deeper than 1/32-inch and not longer than 3/4-inch (not including the portion that is merely a surface scratch that removed only the anodization), and nicks, gouges, and corrosion not deeper than 1/32-inch or more than 1/8-inch in their broadest diameter. The above defects or surface scratches and abrasions that result in anodization removal must be given corrosion prevention treatment.

You must install a new shell if any scratch, nick, or gouge is beyond the repair limits.

Short Fuel Tank

Before disassembling and performing maintenance on the fuel tank, you should check the Maintenance History Label on the forward interior wall of the fuel tank to determine the number of exercise runs on the tank. If the label is missing, stick a Maintenance History Label to the forward interior wall of the fuel tank and record on it the number of runs listed in the torpedo record book. If the number of runs exceeds 10, or a period of 6 years have elapsed since the last Class B maintenance, tenth-run turnaround maintenance must be done. During normal turnaround maintenance, the fuel tank is disassembled as shown in figure 2-21. Tenth-run turnaround maintenance requires disassembly of the fuel tank as shown in figure 2-22. Postrun turnaround maintenance of the short fuel tank (less than ten runs or due for Class B maintenance) consists of the following actions that you must take by observing the procedures in TM SW515-A5-MMI-090/(U)MK 46 MOD 5 unless otherwise indicated:

1. Install a shorting device in the pressure cylinder valve receptacle J5523.
2. Vent the fuel tank.
3. Verify that fuel has been removed.
4. Remove the pressure cylinder. Return expended pressure cylinders to NUWES, Keyport, per NAVSEA Instruction 4440.14.
5. Remove the pressure regulator. Discard the packing.
6. Remove the fuel interlock valve. Discard the disk.
7. Clean and inspect the fuel tank for damaged or nicked packing and joint-ring seal mating surfaces, shell damage or defects, and missing parts.

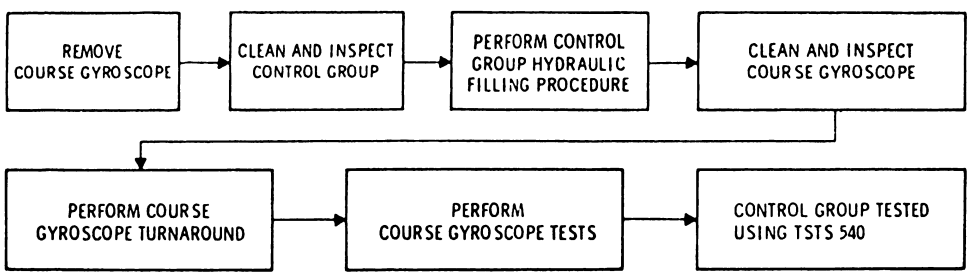

Figure 2-20.—Control group turnaround diagram.

Digitized by Google

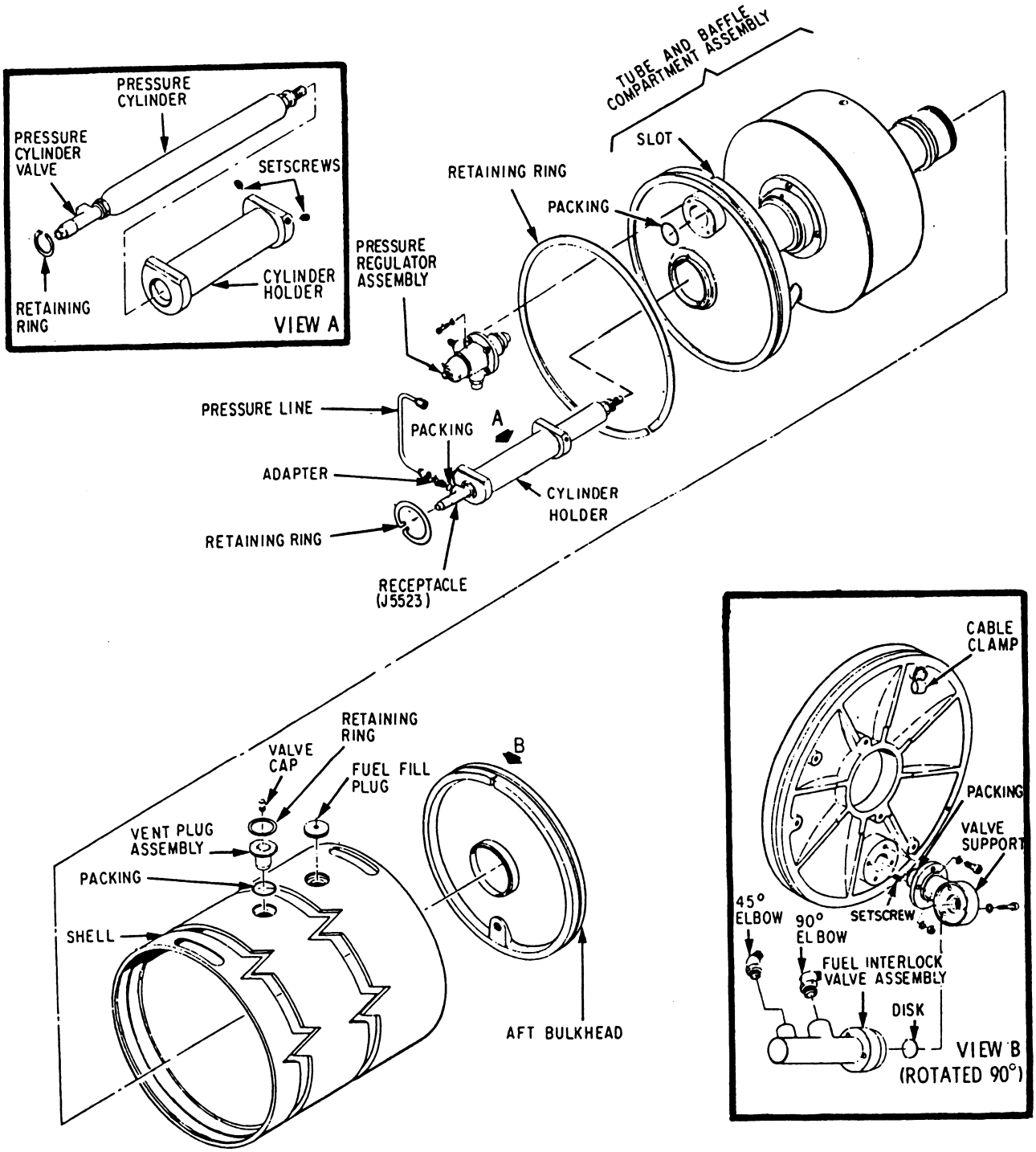

Figure 2-21.—Short fuel tank.

Digitized by Google

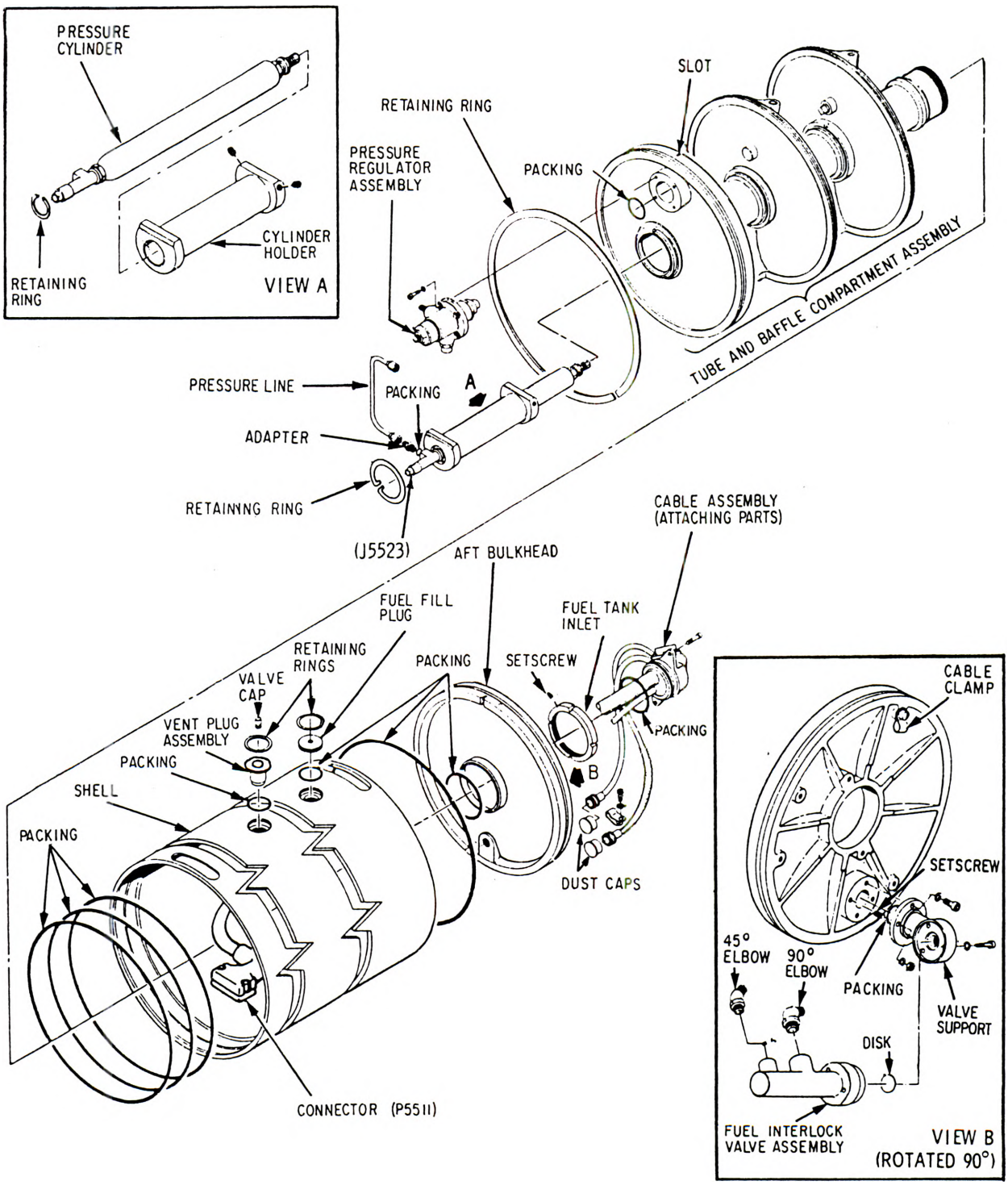

Figure 2-22.—Short fuel tank (disassembled for tenth-run turnaround maintenance).

Digitized by Google

8. Perform turnaround on the pressure regulator. This includes disassembly of the pressure regulator, as shown in figure 2-23, cleaning, inspection, replacement of the check valve and packings, reassembly, and testing.

9. Perform turnaround of the fuel interlock valve. This includes disassembly, as shown in figure 2-24, cleaning, inspection, replacement of packings, reassembly, and testing.

10. Place a new disk in the recess of the fuel interlock valve support and install the valve.

11. Install the pressure regulator and replace the packing during installation.

12. Install the pressure cylinder regulator and replace the packing during installation. After installation, check the squibs in the cylinder valve for continuity and resistance.

13. Perform a vacuum test of the fuel tank.

In performing tenth-run turnaround maintenance of the fuel tank, the technician will perform the following steps, (refer to figure 2-22 for component identification):

1. Install a shorting device in the pressure cylinder valve receptacle J5523.

2. Vent the fuel tank.

3. Verify that fuel has been removed from the fuel tank.

4. Remove the pressure cylinder. Return expended pressure cylinders to NUWES, Keyport, Washington, according to

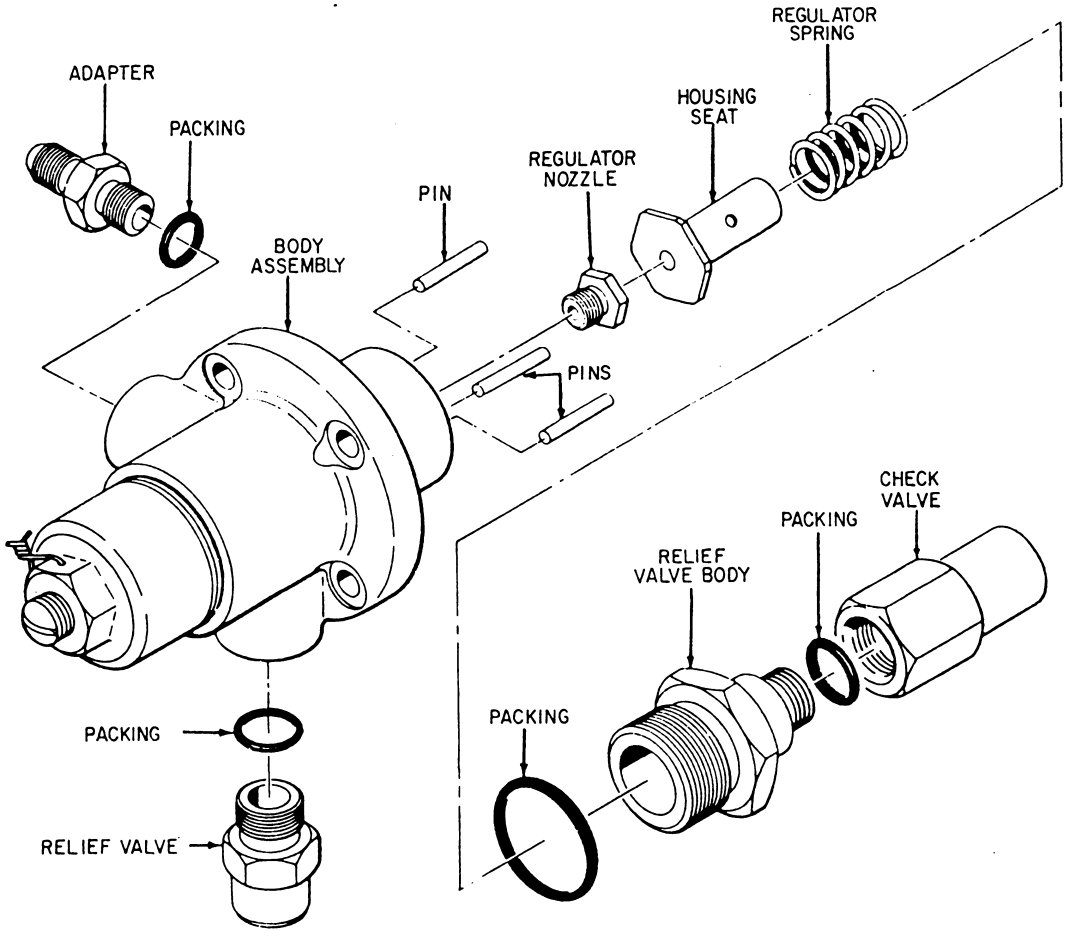

Figure 2-23.—Pressure regulator assembly (exploded view).

Digitized by Google

NAVSEA Instruction 4440.14. Discard the packing.

5. Remove the cable assembly. Discard the packing.
6. Remove the pressure regulator. Discard the packing.
7. Remove the interlock valve. Remove and discard the disk from the valve support.
8. Remove the fuel interlock valve support. Discard the packing.
9. Remove the tube assembly. Discard all packings and the fuel tank nut setscrew.
10. Perform turnaround on the pressure regulator (same procedures as during normal turnaround maintenance).

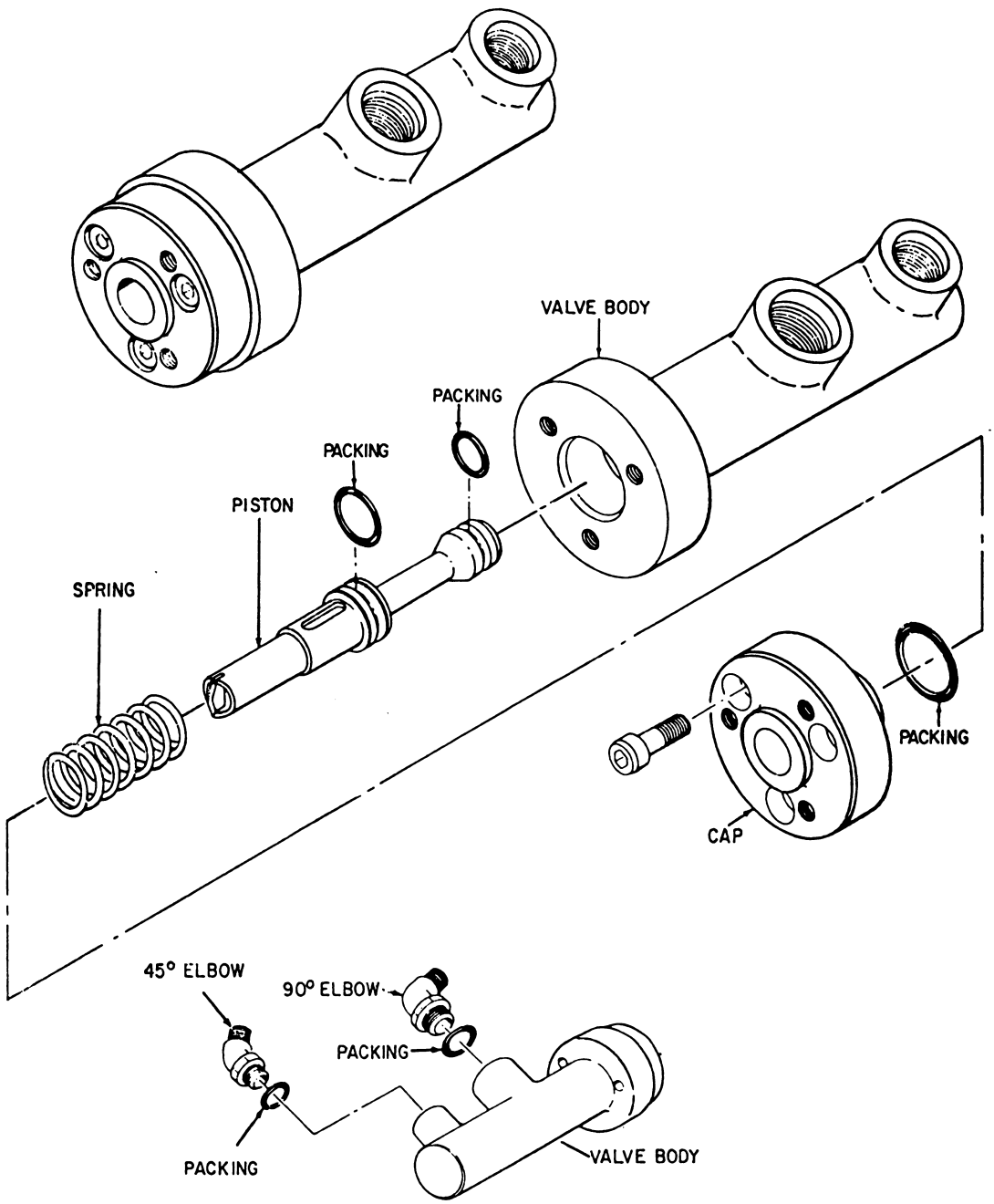

Figure 2-24.—Fuel interlock valve assembly.

Digitized by Google

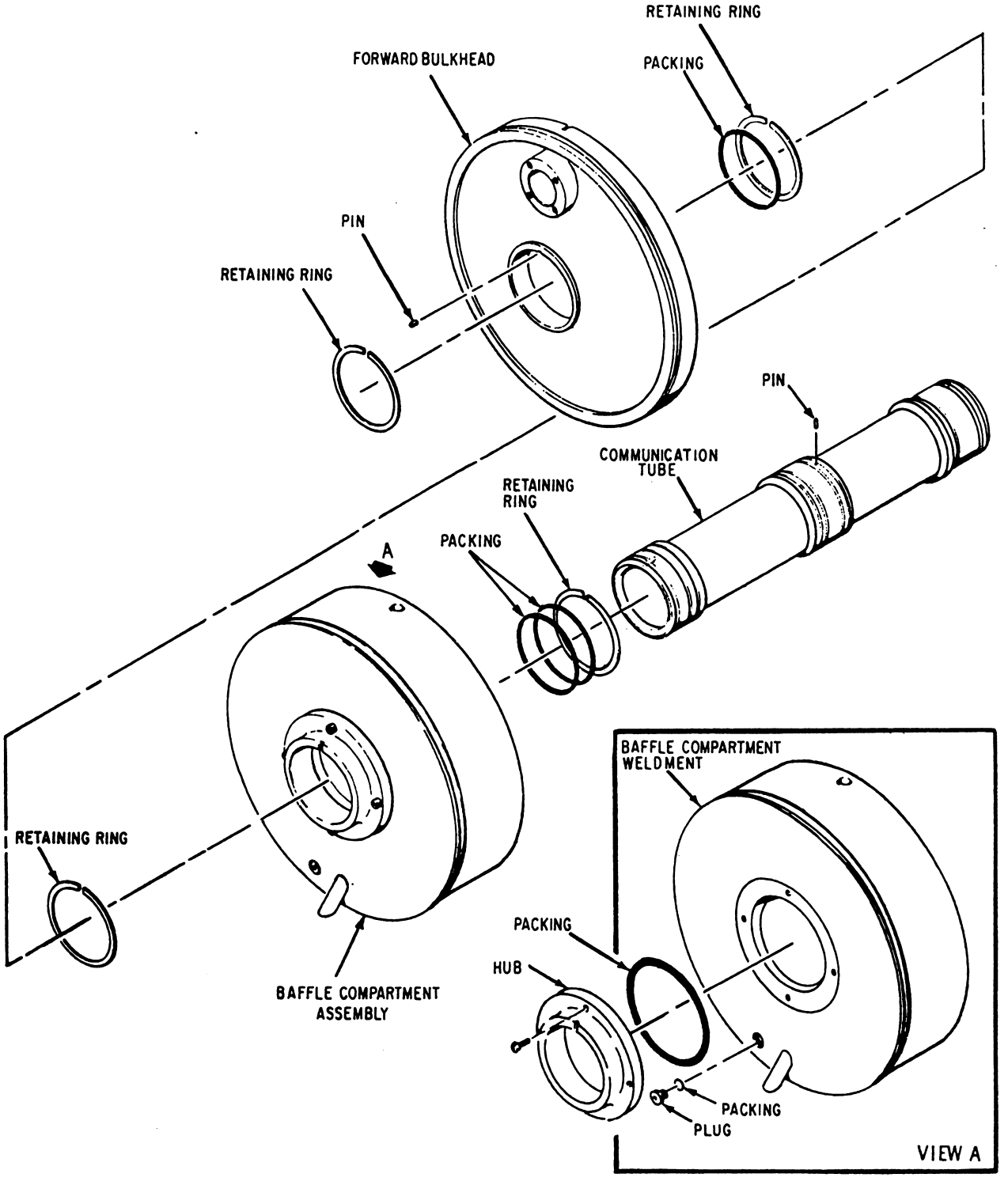

Figure 2-25.—Short fuel tank tube and baffle compartment assembly.

Digitized by Google

11. Perform turnaround on the fuel interlock valve (same procedure as during normal turnaround maintenance).

12. Disassemble the tube and baffle compartment assembly as shown in figure 2-25. Discard the packings.

13. Clean and inspect the tube assembly.

14. Clean and inspect the cable assembly.

NOTE

All packings and components discarded during disassembly must be replaced with new items during assembly.

15. Assemble the tube assembly.

16. Install the tube assembly.

17. Install the fuel interlock valve support.

18. Install the cable assembly.

19. Install the fuel interlock valve.

20. Install the pressure regulator.

21. Install the pressure cylinder.

22. Perform a vacuum test on the fuel tank assembly.

Afterbody Assembly

Maintenance procedures performed on the afterbody (fig. 2-26) during turnaround maintenance include disassembly, cleaning, inspection, parts replacement, reassembly, test, and final inspection. The maintenance must be accomplished by you following the procedures given in SW515-A5-MMI-040(U)MK 46 MOD 5. During disassembly, do not mix hardware and components of individual assemblies. Keep all related parts together for reassembly.

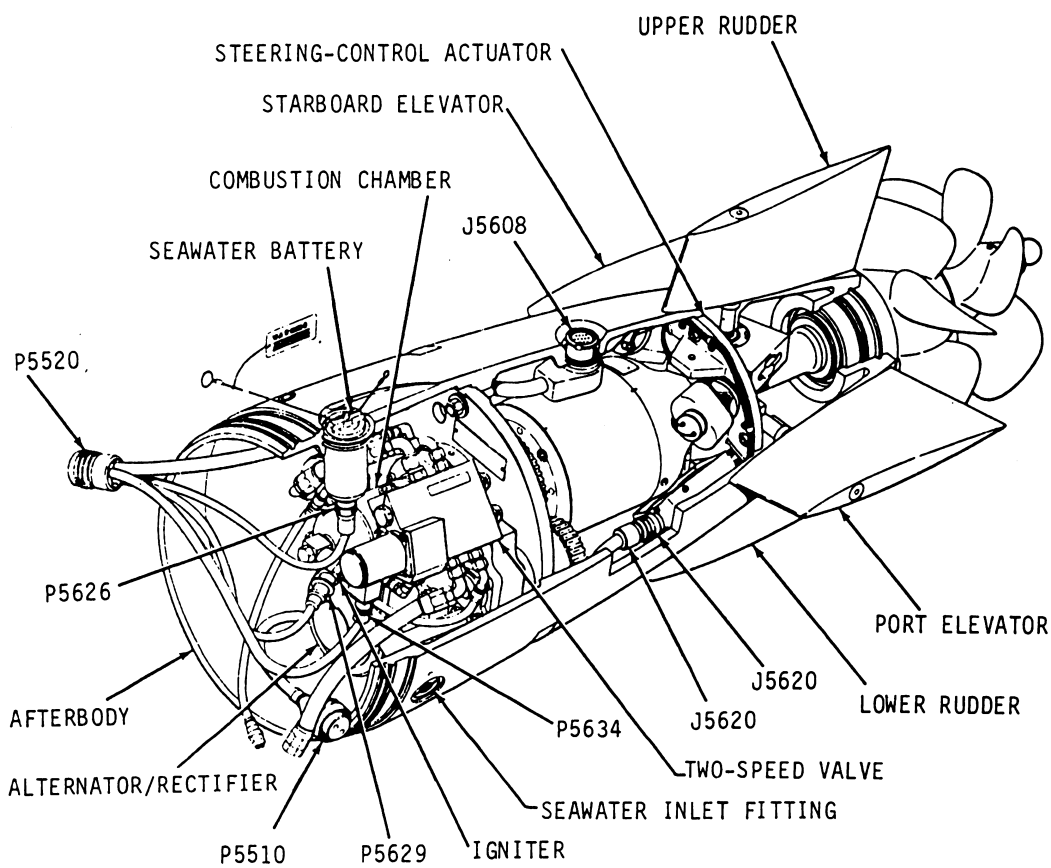

Figure 2-26.—Afterbody component locations.

Digitized by Google

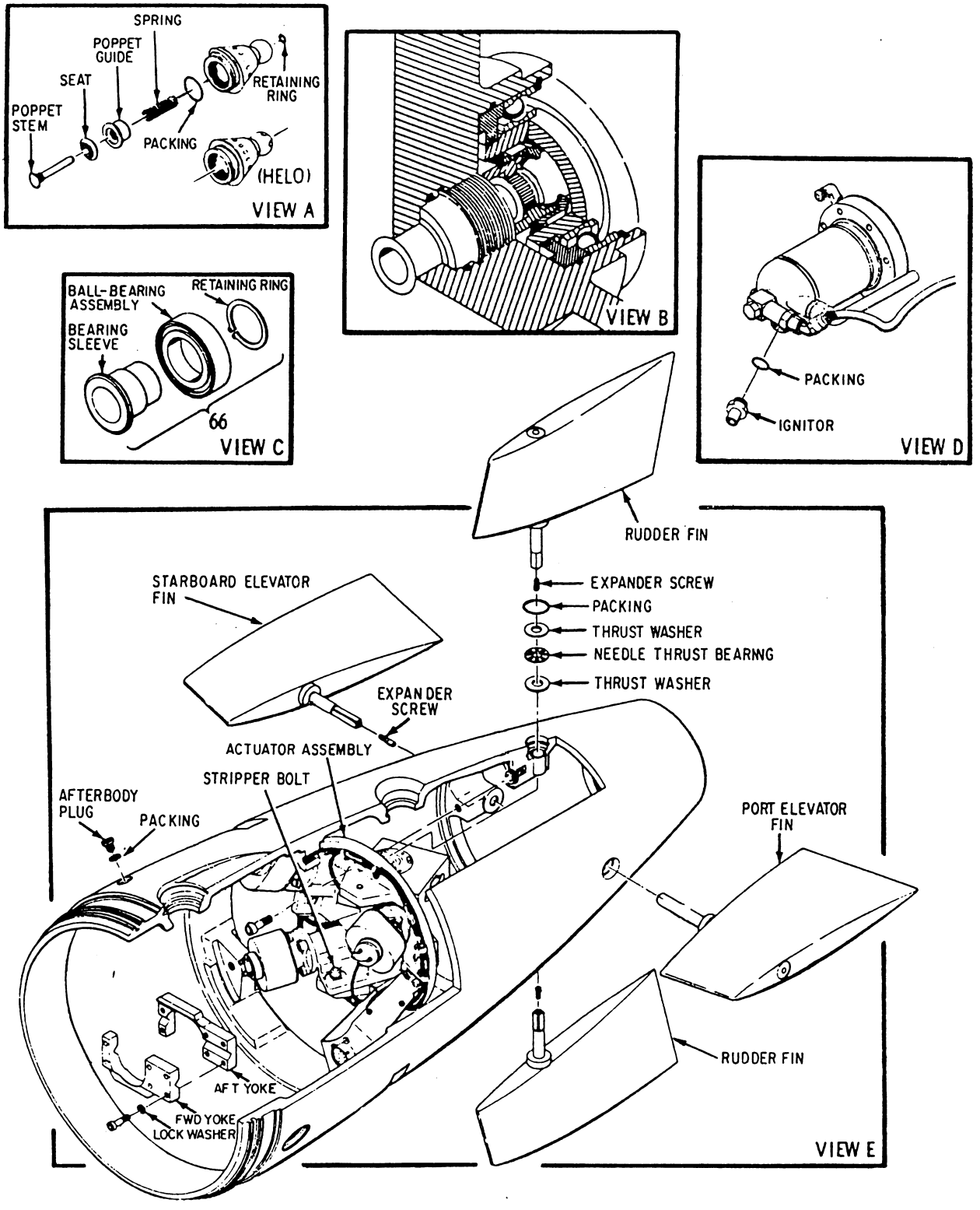

Figure 2-27.—Afterbody components.

Digitized by Google

Refer to figs. 2-26, 2-27, and 2-28 for component identification. An example of post turnaround maintenance on the afterbody is as follows:

1. Ground the afterbody.
2. Remove the exhaust valve and propellers.
3. Remove and discard the seawater battery.
4. Using the afterbody test set, position the elevator's trailing edge to within 1/4-inch of the 0 degree scribe mark on the afterbody

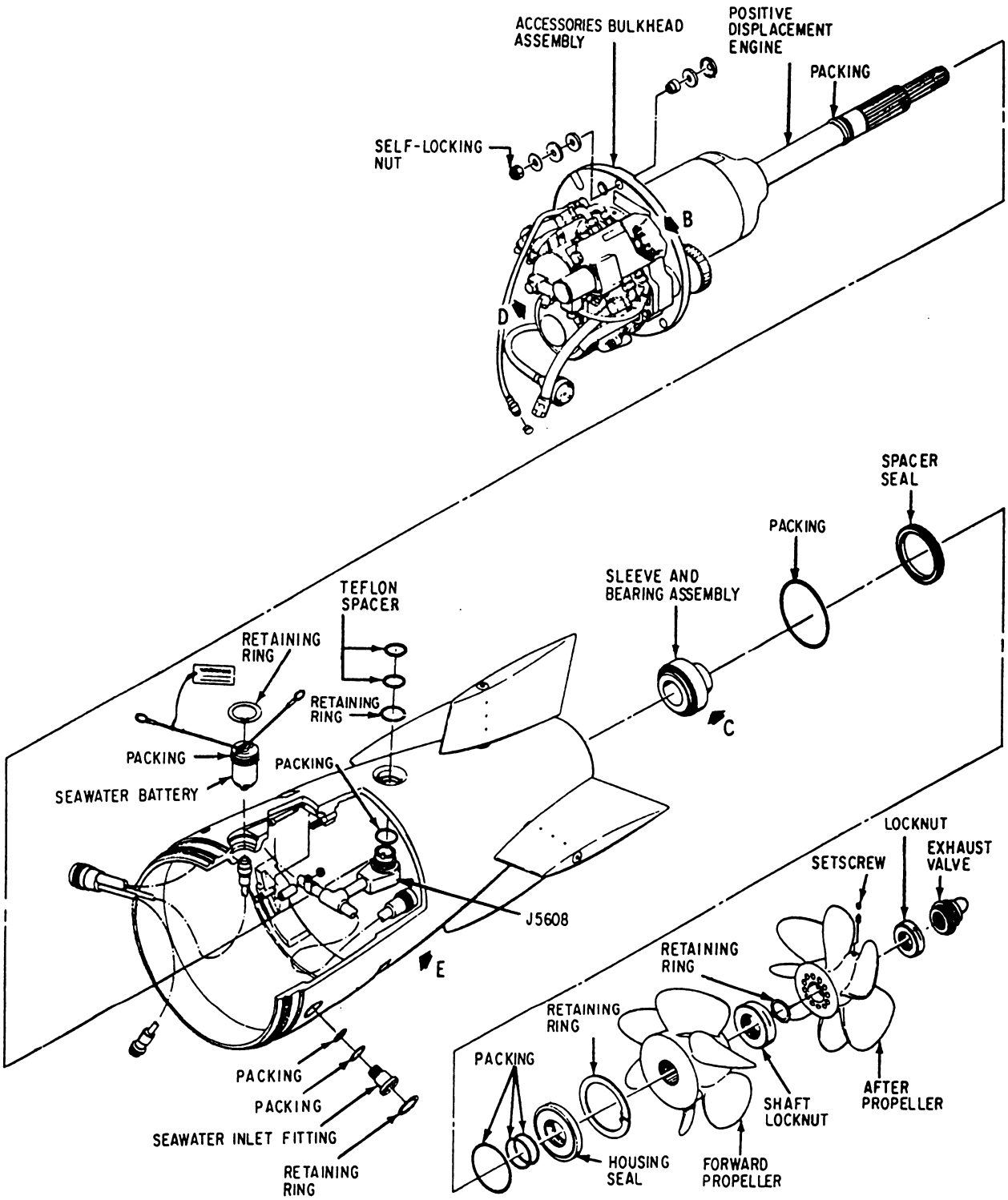

Figure 2-28.—Afterbody components.

Digitized by Google

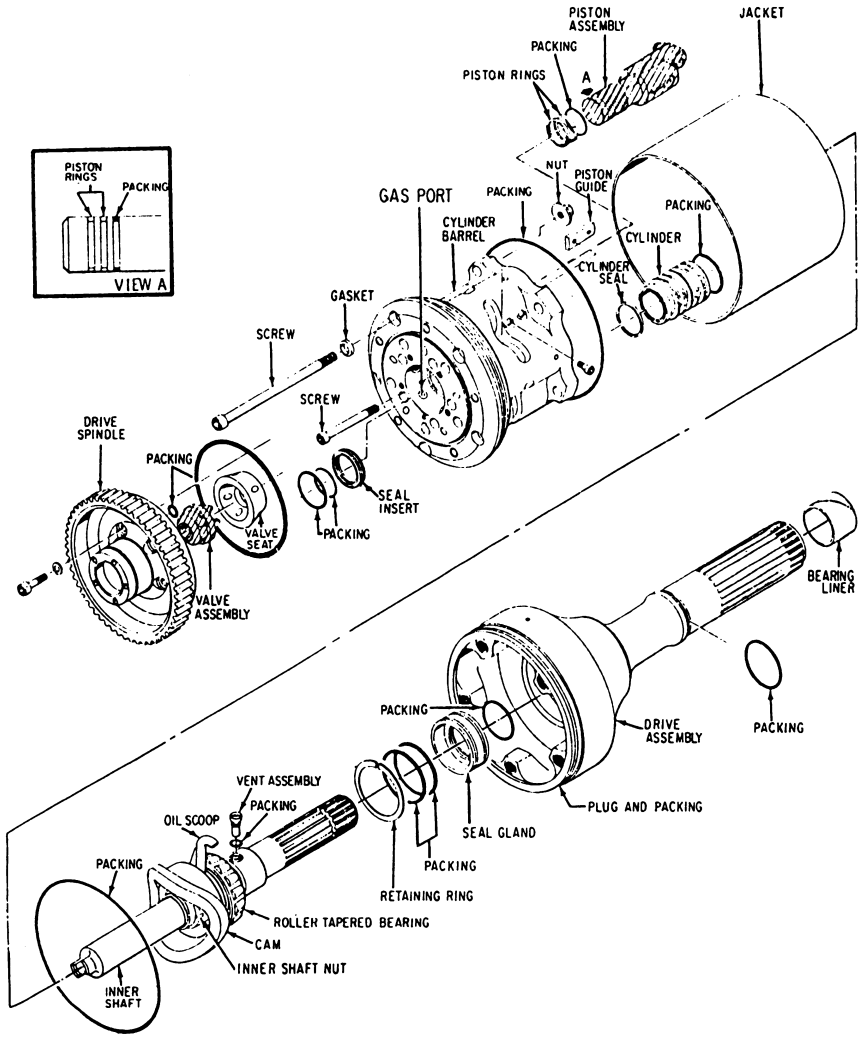

Figure 2-29.—Positive displacement engine.

shell to permit removal of the engine and accessories bulkhead assembly.

5. Install a shorting spring crosswise on the igniter connector.
6. Remove the seawater inlet fitting. Discard the packings.
7. Remove the engine and accessories bulkhead assembly; discard the three self-locking nuts. Perform engine maintenance by following the procedures given in SW515-A5-MMI-050/(U)MK 46 MOD 5. Postrun turnaround maintenance of the engine includes disassembly, as shown in figure 2-29, cleaning, inspection, replacement of packings and certain components (some components may deteriorate and must be replaced after the fifth run—see the torpedo record book for number of runs and reassembly). Components that must be replaced after five runs include the rotary valve, valve seat, five piston assemblies, and 10 piston rings. The used valve must be tagged to indicate the number of runs and then shipped to NUWES, Keyport, Washington. The valve seats, pistons, and rings that have been replaced are discarded. Testing of the engine, following reassembly, is not required.
8. Remove the sleeve and bearing assembly. Discard the packings.
9. Remove the rudders and elevators. Discard the packings.
10. Remove the fire control receptacle. Discard the packings.

Digitized by Google

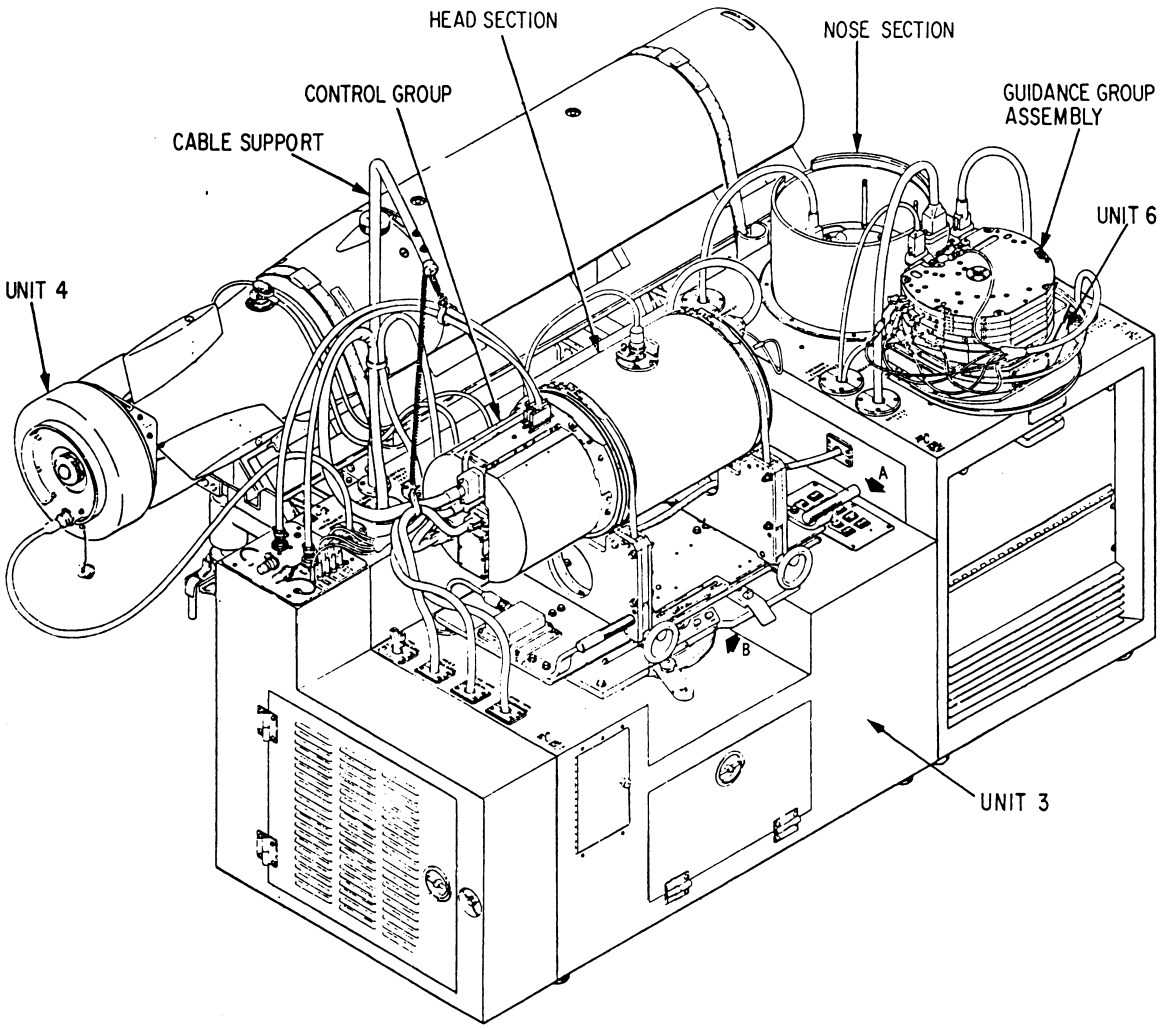

Figure 2-30.—Guidance and control test fixture, unit 3.

11. Clean and inspect afterbody components. If the afterbody shell is damaged beyond the repair limits of the IMA, the torpedo must be reassembled and returned to NUWES, Keyport, Washington, for repair. Other afterbody components damaged beyond local repair limits may be replaced.

NOTE

All packings and components discarded during disassembly must be replaced with new items during assembly.

12. Install the fire control receptacle.
13. Install the rudder and elevator fins.
14. Install the sleeve and bearing assembly.
15. Install the engine and accessories bulkhead assembly.
16. Install the seawater inlet fitting.
17. Install the seawater battery closure plug.
18. Install the igniter.
19. Vacuum test the afterbody.

After completing a satisfactory vacuum test, you should make the afterbody and fuel tank connections, test the firing circuit, and assemble the afterbody and fuel tank together.

Torpedo System Testing and Final Assembly

After postrun turnaround maintenance of individual torpedo components has been completed, the torpedo is partially assembled and installed on the Mk 540 test set guidance and control test fixture (fig. 2-30) for system testing. Procedures

Digitized by Google

Table 2-3.—Operator Question/Instruction and Response

Question/Instruction	Response
TSTS S/N ??	Type test set serial number (218).
OPERATOR ??	Type operator initials (HDS).
ENTER RUN TYPE 1 - Mk 46 Mod 1 Phase 2 2 - Mk 46 Mod 2 3 - Mk 46 Self Test 4 - Mk 46 Mod 4 (CAPTOR) 5 - Mk 46 Mod 5 TYPE =	Type number corresponding to torpedo being tested (5).
(I) TORPEDO REGISTER NO.?	Type six-digit torpedo register number (123456).
(I) CONTROL GROUP/RECEIVER SERIAL NUMBERS (CG, RECVR, XMITR, CAP)?	Type serial number of control group, receiver, transmitter and forward cap (1234, 2345, 3456, 4567).
CONTROL GROUP ORDALT 10641 INSTALLED YES OR NO?	Verify if ORDALT is installed in control group and type accordingly (YES).
TORPEDO TYPE (EX OR WH)?	Verify torpedo head section and type accordingly (EX).
CONNECT THE MK 540 DISARM PLUG, THEN TYPE GO (See NOTE)	Verify Mk 540 disarm plug is installed in Exercise Head and and type GO (GO).
(I) FLOOR DEPTH (650 to 1650)?? (See NOTE)	Type exercise head floor depth as per par. 4-80 step 3 of SW515-A5-MM1-140/(U) MK 46 MOD 5 (1000)

NOTE: Step deleted if testing warhead.

for testing the control group and the torpedo with the Mk 540 test set during postrun turnaround, and Class B maintenance are the same.

The torpedo test program for testing the torpedo with the Mk 540 test set is contained on two flexible disks. After the disks are manually loaded, the program is performed automatically in proper sequence. During torpedo testing, the terminal of the test set will display instructions and questions requiring operator response. An example of questions and instructions that are displayed on the terminal and the action to be taken by the operator are shown in table 2-3.

At the completion of the system test, the operator receives instructions to "ENTER FIRE CONTROL SETTING." After setting the fire control, the message "A TORPEDO MAY NOW BE SAFELY DISCONNECTED" is displayed indicating that the torpedo test program has been completed.

If, during the system test, a malfunction that could damage the torpedo or test set occurs, you should perform the following emergency test set shutdown procedures immediately:

1. Press the HALT switch.
2. Simultaneously position the +40 vdc power supply and the −40 vdc power supply ON/OFF switches to OFF.
3. Press the POWER OFF (STANDBY) pushbutton.

Digitized by Google

4. Perform the self-test by following the procedures contained in TM ST822-AC-MMI-010/MK 540-3.

After the torpedo system test is completed, the torpedo is assembled for another exercise run or is converted to a warshot. Figures 2-31 and 2-32 are diagrams of torpedo maintenance actions required after the torpedo has been system tested with the Mk 540 test set. Figure 2-31 is a diagram of maintenance actions for a torpedo being reassembled to an exercise torpedo. If the torpedo is to be converted to a warshot after postrun maintenance, the exercise head, short fuel tank, and positive buoyant section are placed in storage. Class B maintenance is then performed on the long fuel tank and afterbody, the firing circuit is tested, and the fuel tank and afterbody are assembled for testing with the Mk 540 test set. A dummy warhead is used during the torpedo

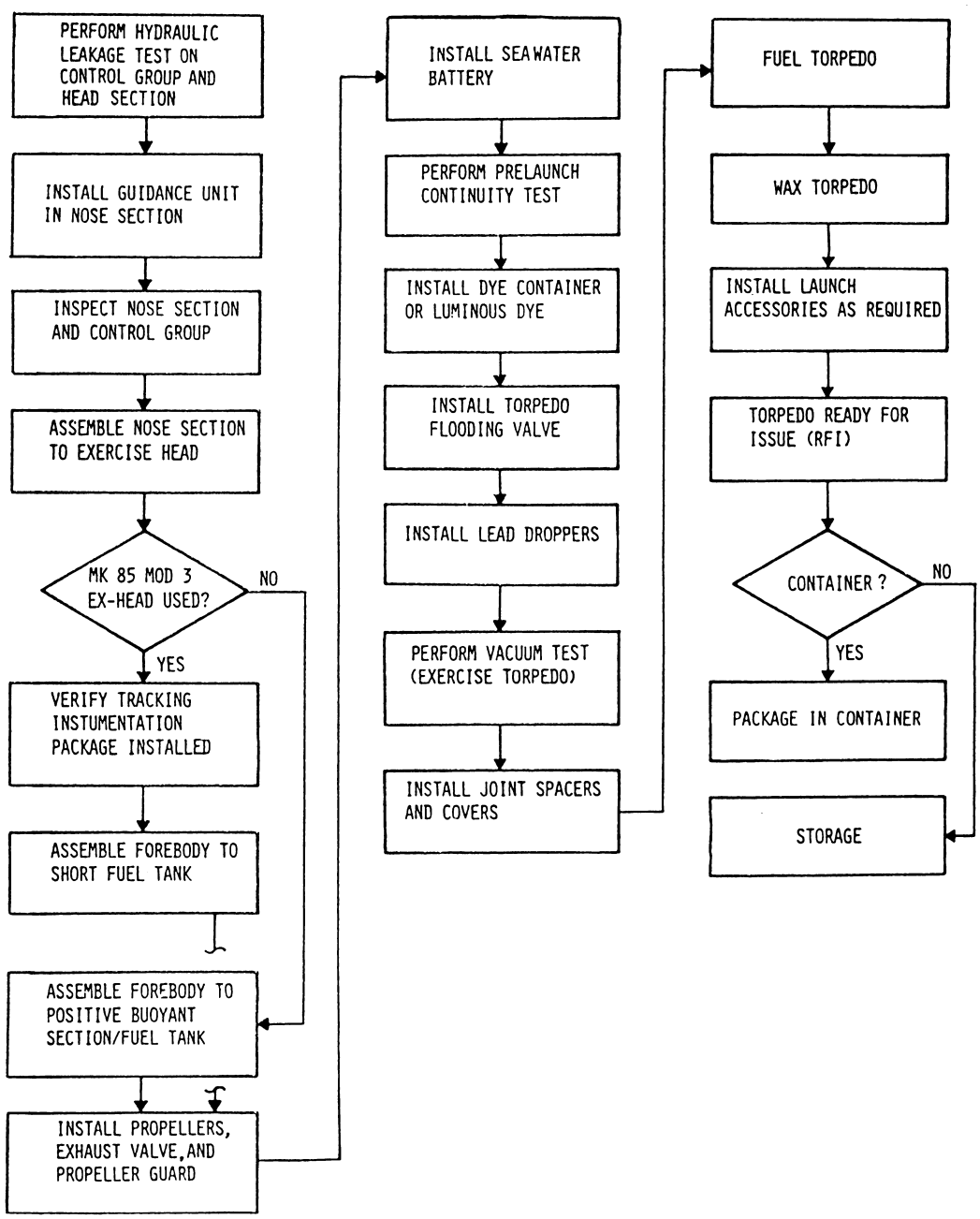

Figure 2-31.—Maintenance actions required after a torpedo (exercise) system test with the Mk 540 test set.

Digitized by Google

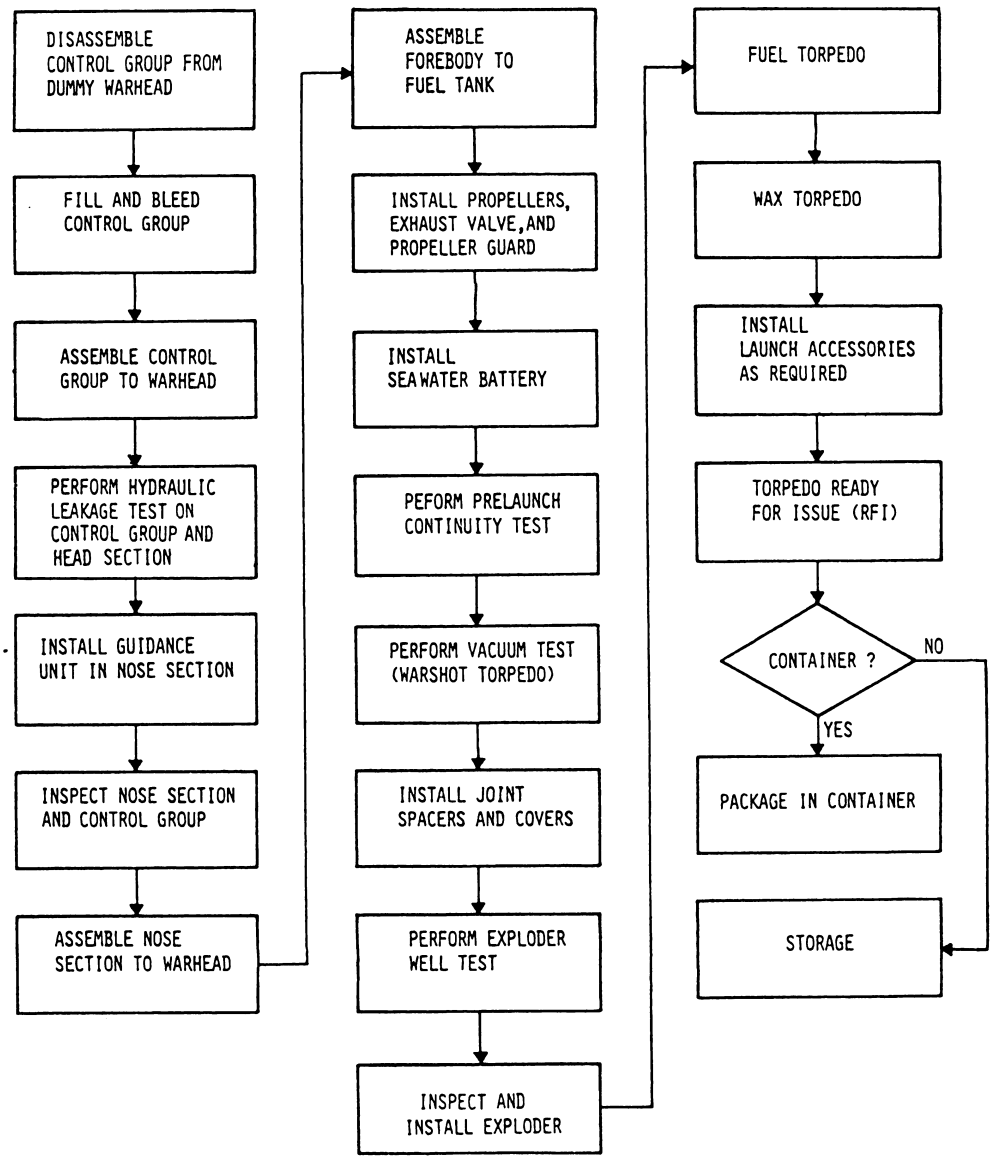

Figure 2-32.—Maintenance actions required after a torpedo (warshot) system test with the Mk 540 test set.

system test. Figure 2-32 is a diagram of maintenance actions required to be completed following the system test in order that the torpedo may be converted to a warshot.

Class B Maintenance (Warshot Torpedo)

Class B maintenance is performed at 6-year intervals. This type of maintenance includes a complete breakdown of a reissued torpedo propulsion system and fuel tank, and a complete system function test according to procedures contained in TM SW515-A5-MMI-030/(U)MK 46 MOD 5.

Torpedoes stored in a Mk 32 torpedo tube, ASROC launcher, or torpedo magazine, and returned from combatants or other activities, must be inspected for corrosion, scratches, nicks, and other damages. Torpedoes in condition code "A" and containerized in Mk 197 or Mk 535 containers by an IMA or storage and issue (S&I) activity do not require a visual inspection if the containers are not ruptured and they have humidity indicators with satisfactory readings.

After a visual inspection (if required) is completed on a torpedo, the fuel tank is vented; the exploder is removed; the nose section is disassembled from the warhead; the warhead is

Digitized by Google

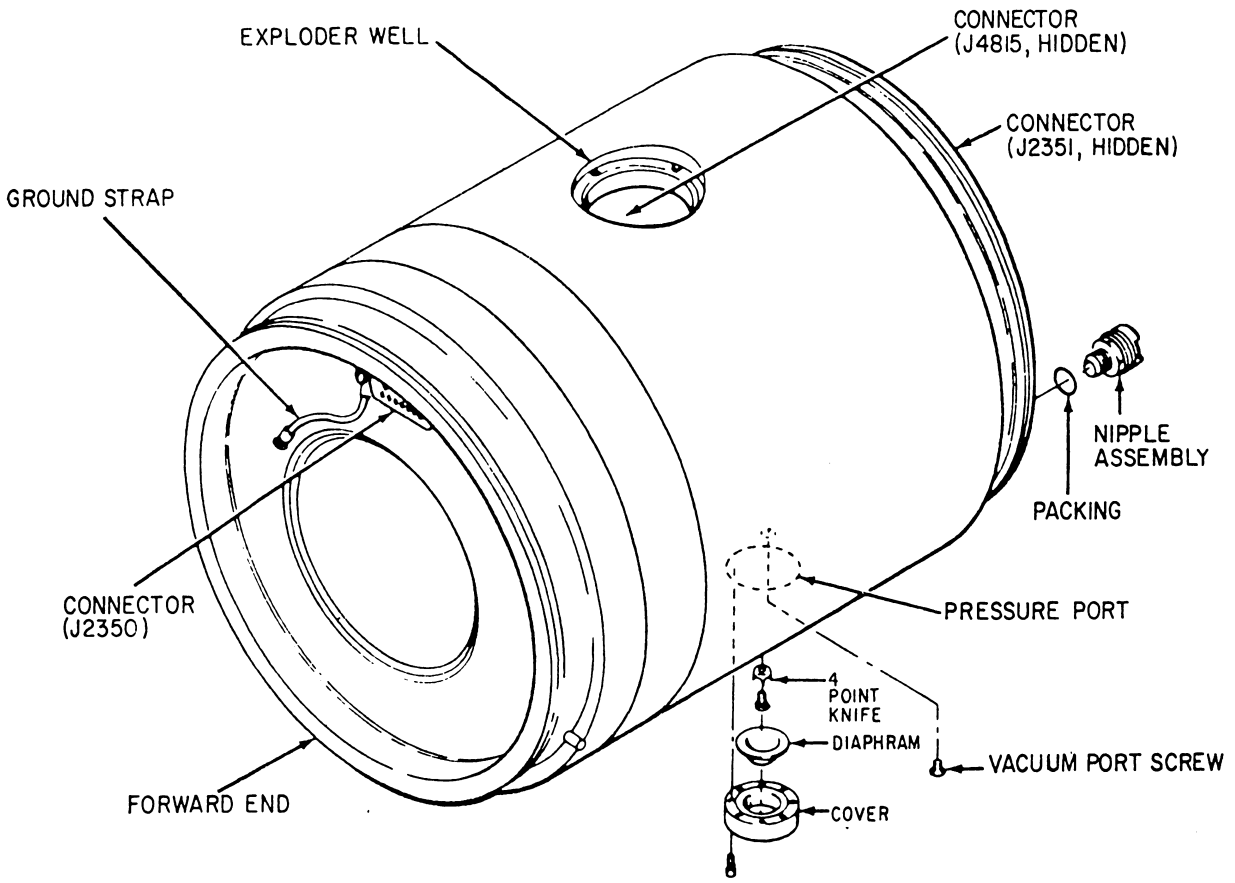

Figure 2-33.—Mk 103 warhead.

disassembled from the fuel tank; the control group is disassembled from the warhead; the torpedo is defueled, and the fuel tank is disassembled from the afterbody.

NOSE SECTION.—Your procedures for Class B maintenance of the nose section are the same as for postrun turnaround maintenance.

WARHEAD.—Class B maintenance is the only type of maintenance required for the warhead. The maintenance procedures performed on the warhead include disassembly, cleaning, inspection, parts replacement, reassembly, and testing.

The explosive in the warhead is relatively unaffected by shock or temperature changes, but it must always be handled strictly according to instructions in NAVSEA OP 5. The warhead must be grounded at all times during maintenance or testing.

If a warhead is dropped, an Explosive Incident Report must be submitted in accordance with OPNAV Instruction 5102.1. A request for disposition must be forwarded to Naval Sea Systems Command and a copy of the request to Naval Ocean Systems Center.

Warhead maintenance is accomplished by taking the following actions: (Refer to figure 2-33 for component identification.)

1. Verify that the exploder mechanism has been removed from the warhead. If it is still in the warhead, remove the exploder by following the procedures contained in SW515-A5-MMI-130/(U)MK 46 MOD 5.
2. Ensure that the warhead is free from corrosion, dirt, and damage before testing and servicing it. Clean the warhead and all exposed packing and joint-ring mating surfaces, and verify that all electrical connectors are clean and free of defects.
3. Inspect the warhead for nicks, gouges, or scratches that expose the influence coil wiring—for separation of the influence coil laminate from the head shell; for cracks,

Digitized by Google

dents, nicks, gouges, and scratches in the head shell; for missing parts and loose connectors; and for visible defects.

4. Inspect all exposed packing grooves and joint-ring mating surfaces for nicks, dents, or burrs that can cause leakage.

Correct all repairable defects in accordance with SW515-A5-MMI-130/(U)MK 46 MOD 5. If the warhead is damaged beyond the IMA repair capability, it must be returned to the designated overhaul point as directed by NAVSEA Instruction 4440.14.

Maintenance of the warhead pressure system includes replacement of the diaphragm and the nipple assembly packing, and changing of the hydraulic fluid. Since the pressure port of the system contains a knife, care must be taken when removing the cover and diaphragm.

You can test the pressure system by attaching a hydraulic pressure adapter to the opening in the pressure port cover and connecting a VAND system. Pressurize the system to 100 ± 10 psi for 10 minutes. While the system is pressurized, check for leakage. If a leak occurs at the nipple, packing, or diaphragm, the leak should be corrected and the system retested. If a leak is the result of damage to the warhead, the head must be returned to the designated overhaul point in accordance with NAVSEA Instruction 4440.14.

Maintenance of the warhead cable consists of a functional test, an insulation resistance test, and a continuity test. The electrical cable test set MK 444 Mod 0 and exploder well test set Mk 445 Mod 0 are used for these tests. If a fault occurs during testing, you should refer to the trouble-shooting instructions in TM SW515-A5-MMI-130/(U)MK 46 MOD 5. The cable cannot be removed from the warhead. If there is an indication of an open or short circuit or low-insulation resistance, the warhead must be returned to the designated overhaul point.

CONTROL GROUP ASSEMBLY.—Again, your procedures for Class B maintenance of the control group are the same as for postrun turn-around maintenance. Class B maintenance of the course gyroscope consists of cleaning; inspection of the gyroscope for a dented or scratched body, a broken connector, corrosion, and missing or broken hardware; testing of the course gyroscope will be with the Mk 484 Mod 1 test set. Procedures for performance control group maintenance are contained in TM SW515-A5-MMI-140/(U)MK46 MOD 5.

LONG FUEL TANK.—Maintenance actions required for the long fuel tank during Class B maintenance are the same as the requirements for tenth-run turnaround maintenance of the short fuel tank. However, procedures for disassembly and reassembly of the long and short fuel tank tube assemblies differ. The long fuel tank tube assembly consists of a 22.8-inch-long communication tube, a forward bulkhead, and two baffles. Installation of the aft bulkhead on the tube assembly during fuel tank assembly results in the forming of three fuel compartments with the baffle compartment located inside the aft fuel compartment. The short fuel tank tube assembly consists of a 16.4-inch-long communications tube, a forward bulkhead, one baffle, and in one version an antislosh baffle compartment assembly. The antislosh baffle is mounted just forward of the aft bulkhead and effectively forms two compartments. Procedures for performing tank maintenance are contained in TM SW515-A5-MMI-090/(U)MK 46 MOD 5.

AFTERBODY.—Requirements for Class B maintenance of the afterbody are the same as for postrun maintenance except for the following differences:

1. During Class B maintenance with no turnaround maintenance, the unexpended battery is inspected for reuse. During postrun maintenance, the expended seawater battery is discarded.

2. Positioning of the elevators is not necessary during Class B maintenance. During postrun maintenance, the elevators usually require positioning in order that the engine and accessories bulkhead can be removed.

3. During Class B maintenance, the igniter is reused. During postrun turnaround maintenance, the igniter must be replaced.

Torpedo Systems Testing and Final Assembly

Procedures and requirements for torpedo system testing with the Mk 540 test set are the same as they are for postrun turnaround. After Class B testing of the control group is completed with the Mk 540 test set during scheduled maintenance, the torpedo is assembled and tested as outlined in figure 2-28.

Digitized by Google

WARHEAD.—Perform warhead maintenance by taking the following actions:

1. Inspect the warhead for the following discrepancies:
   a. Nicks, gouges, or scratches that expose influence coil wiring.
   b. Separation of the influence coil laminate from the head shell.
   c. Cracks, dents, nicks, gouges, and scratches in the head shell.
   d. Missing parts, loose connectors, and other visible defects.
2. Reject the warhead if the influence coil wiring is exposed or laminate is separated from the shell, or if there are dents, cracks, or unrepairable scratches, nicks, or gouges in the shell.
3. Inspect all exposed packing grooves and joint-ring mating surfaces for nicks, dents, or burrs.
4. Verify that no hydraulic fluid is present around the hydrostatic pressure port (if hydraulic fluid is present, perform warhead maintenance procedures contained in SW515-A5-MMI-130/(U)MK 46 MOD 5).
5. Correct all repairable defects in accordance with SW515-A5-MMI-130/(U)MK 46 MOD 5. Damaged warheads (beyond IMA repair capability) must be returned to the designated overhaul point as stated in NAVSEA Instruction 4440.14.

NOSE SECTION.—During maintenance, the guidance unit is removed from the nose section and cleaned and inspected for loose and broken wires, damaged connectors, corrosion, broken and dented parts, missing and broken hardware, and discolored and charred components. The transducer must be cleaned and inspected. The nose section and transducer must be replaced if an inspection reveals any of the discrepancies listed under postrun maintenance.

Inspection of Fleet Return Torpedoes

If a maintenance activity receives a torpedo that does not require postrun turnaround, or Class B maintenance, a fleet return inspection, according to procedures in TM SW515-A5-MMI-030/(U)MK 46 MOD 5, must be performed before the torpedo can be reissued. Figure 2-34 is a flow diagram of maintenance actions that must be completed during an inspection of fleet return torpedoes.

When performing a fleet return inspection, you do not have to remove the exploder unless it is damaged.

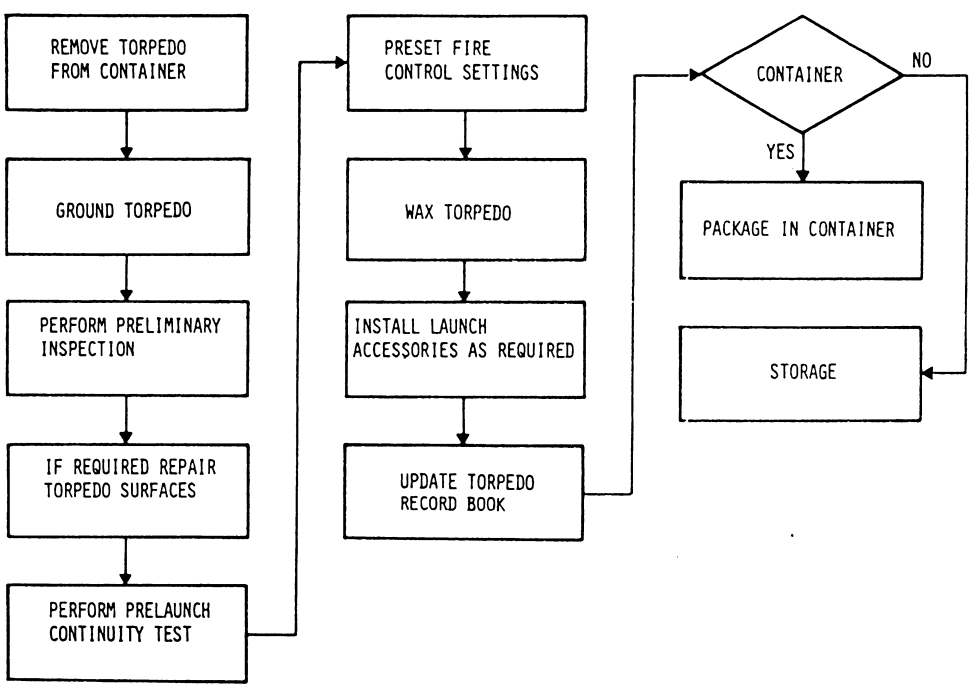

Figure 2-34.—Inspection flow diagram of fleet return torpedoes.

Digitized by Google

Table 2-4.—Repairs Required for Damaged Torpedoes

DAMAGE OR CONDITION	CORRECTIVE ACTION
Nose section diaphragm damaged	Install new transducer.
Exercise head: Explosive bolts of lead-dropper device accidentally fired	Perform exercise head functional test. Install new explosive bolts. Reinstall lead droppers.
Torpedo accidentally dropped	Perform complete procedure for exercise run turnaround, or periodic maintenance on warshot torpedo. Return warhead to Depot Maintenance Activity marked: DROPPED X-RAY FOR CRACKS. Submit Explosive Incident Report in accordance with OPNAV Instruction 5102.1 with request for disposition to Naval Sea Systems Command and a copy to Naval Ocean Systems Center.
Fin(s) damaged	Remove afterbody major assemblies. Remove all damaged parts and install new parts. Reassembly afterbody. Perform afterbody electrical test.
Accidental ignition (torpedo out of water)	Perform afterbody turnaround. Perform fuel tank turnaround. Visually inspect all parts for damage, including fins and propellers. Remove all damaged parts and install new parts. Perform all tests required. Perform exercise head turnaround of exercise torpedo.
Torpedo flooded	Clean all parts with fresh water and alcohol (CA) solution to remove saline. Dry thoroughly using low-pressure compressed air. Remove damaged or leaky seals and install new parts. Remove any corroded parts and install new parts. Return FIR items that have come in contact with saltwater to Deport Maintenance Activity marked: WATER DAMAGED. Perform completed procedure for exercise run turnaround, or periodic maintenance on warshot torpedo. Return warhead to Depot Maintenance Activity marked: DROPPED X-RAY FOR CRACKS. Submit Explosive Incident Report in accordance with OPNAV Instruction 5102.1 with request for disposition to Naval Sea Systems Command and a copy to Naval Ocean Systems Center.
Seawater battery damaged externally	Install new seawater battery.
Propeller(s) damaged	Install new propeller(s).
Launch accessories damaged	Remove damaged launch accessories and install new parts.

Digitized by Google

Condition code A torpedoes containerized by an IMA or S&I activity that show no container rupture and have a satisfactory humidity indicator reading do not have to be inspected.

REPAIR AND REPLACEMENT OF COMPONENTS.—Repair or replacement of torpedo components must never be done except as authorized by the applicable technical manuals. Repair and replacement procedures involve the following functions:

1. Repair of surface defects in aluminum alloy shell surfaces (nose section, exercise head or warhead, afterbody shell, control surfaces, and propellers).
2. Corrosion prevention.
3. During reassembly, replacement of all parts that fail to meet inspection requirements.
4. Installation of new packings, seals, and gaskets. These items have a tendency to take a permanent set when compressed for long periods of time, and must be replaced regardless of their appearance. Table 2-4 lists accidental damages that might occur to a torpedo during handling, shipment, or a sea run, and the steps to be taken to correct the condition. If replacement of a defective FIR component is recommended, the following actions must be taken:
   a. The FIR assembly or replaceable component must be replaced with a new or reconditioned part.
   b. The torpedo must be retested in accordance with applicable test procedures to ascertain that malfunctions have been corrected.
   c. The defective FIR assembly or component must be packaged and returned to the applicable depot maintenance activity.
   d. The FIR assembly or component failure must be reported on a Torpedo Maintenance Data Form 8510/5.

SUMMARY

The torpedo maintenance program is a very in-depth program requiring a complete understanding of the overall maintenances scheme and exactly where you fit into it. We have introduced you to the different levels of maintenance: organizational intermediate, and depot.

To help you to understand how this maintenance system works, we went into the specifics for the Mk 46 torpedo. We discussed the organizational level and its many responsibilities as well as the intermediate level and the detailed maintenance requirements that comprises it. We delineated the differences that exist between class B maintenance and the other levels of maintenance.

National defense and a large portion of its planning is founded on the probability that weaponry throughout the fleet is operational. Your job as a technician is to ensure that this policy is supported. At the various levels of maintenance, you will be expected to use the proper reference to complete maintenance and the proper publications and forms to report it.

REFERENCES

Assembly Instructions for MK 46 Torpedo Flight Accessories, SW512-AO-ASY-010/MK 46 FLT ACCESS, Naval Sea Systems Command, Washington, D.C., 1986.

Description, Operation, Installation, Removal, and Trajectory Data, MK 46 Flight Accessories, SW512-AO-ASY-010/MK 46 FLT ACCESS, Naval Sea Systems Command, Washington, D.C., 1989.

Firing Craft Procedures For Torpedo Mk 46 Mods 1, 2, and 5, SWS15-AO-PRO-020, Naval Sea Systems Command, Washington, D.C., 1986.

Maintenance Manual For Anti-Submarine Rocket (ASROC) Missile, SW180-AA-MMO-010/2963, Naval Sea Systems Command, Washington, D.C., 1990.

MK 46 Mod 5 Illustrated Parts Breakdown, SW515-A5-MMI-020, Naval Sea Systems Command, Washington, D.C., 1988.

Operations and Maintenance Manual Organization Level For Recoverable Exercise Torpedo (REXTORP) MK 46, Naval Sea Systems Command, Washington, D. C., 1989.

Organization and Intermediate Maintenance Activities Reporting for Air/Surface Torpedoes, TW510-AA-PRO-010/Torpedo Maintenance Data Form Naval Sea Systems Command, Washington, D.C., 1980.

Digitized by Google

Otto Fuel II, Safety Storage and Handling Instruction, S6340-AA-MMA-010, Naval Sea Systems Command, Washington, D.C., 1988.

Ships' Maintenance and Material Management (3-M) Manual, OPNAVINST 4790.4, Chief of Naval Operations, Washington, D.C., 1987.

Technical Manual For MK 46 Mods (c), SW515-A5-MMM-010, Naval Sea Systems Command, Washington, D.C., 1986.

Torpedo and Advanced Underwater Weapon Recovery Equipment, Vessels and Procedures, SW591-AC-PRO-010, Naval Sea Systems Command, Washington, D.C., 1984.

Digitized by Google

CHAPTER 3

HEAVYWEIGHT TORPEDO MAINTENANCE

OVERVIEW

Identify maintenance requirements at the various levels for both the Mk 48 and the Mk 48 ADCAP and the reporting requirements for each.

OUTLINE

Safety

Organization level maintenance

Intermediate level maintenance

Depot level maintenance

Records and reports

Continuing with our discussion of torpedo maintenance, you will find that the maintenance concept for the Mk 48 and the Mk 48 ADCAP torpedo conforms to the three levels of maintenance previously discussed in chapter 2. They are further defined for specific maintenance in *Mk 48 Maintenance Policy*, NAVSEAINST 8510.11.

SAFETY

Proper use of equipment and material during torpedo maintenance and handling operations is mandatory to assure safety of both personnel and equipment. Hazardous areas of particular significance include Otto Fuel II toxicity, flammability, and its by-products of combustion; electrical equipment; and hazards associated with handling equipment.

OTTO FUEL II HAZARDS

Otto Fuel II is a monopropellant that manifests toxic effects on individuals as a result of vapor inhalation, absorption through the skin, or ingestion of the fuel. For this reason, at least two people must be present during any evolution involving Otto Fuel II operations. Protective items (neoprene or natural rubber boots, polyethylene or neoprene gloves, neoprene aprons, positive pressure air-breathing apparatus [in accordance with NAVSEA Technical Manual, *Otto Fuel II; Safety, Storage, and Handling Instructions*, S6340-AA-MMA-010] or goggles) must be worn as a precautionary measure to control the toxic effects of Otto Fuel II. The positive pressure air-breathing apparatus is not required when it is determined that the work area contains less than 0.2 parts per million (ppm). This is the maximum tolerance level of the fuel. The Otto Fuel II Detector Mk 15 Mod 0 can be used to perform these measurements. This threshold limit value has been established and published in NAVMEDCOMINST 6270.1 as a 0.2 ppm "ceiling" value that is never to be exceeded.

The combustion of Otto Fuel II in the Mk 48 Torpedo (Mod 1, 3, & 4) and Mk 48 ADCAP engines results in exhaust gases containing a number of hazardous components. The most significant combustion products are carbon monoxide (CO), hydrogen cyanide (HCN), and oxides of nitrogen. These gases are poisonous, and special care must be taken to prevent an illness or death as a result of excessive exposure. Carbon monoxide poses a particular hazard during an inadvertent on-deck engine start and "hot-run." If this occurs, the area must be evacuated immediately. Hydrogen cyanide is both toxic and flammable, and poisoning can result from ingestion of its liquid form (hydrocyanic acid), breathing of contaminated air, or absorption. Absorption occurs most readily through the

Digitized by Google

eyes, mucous membranes, and feet. In the event of HCN gas poisoning, first aid should be administered immediately, as described in chapter 6 of *Torpedo Mk 48 all Mods, Weapon System Description for the Mk 48 Torpedo*, OP 4020, and chapter 6 of *Torpedo Mk 48 ADCAP Weapon System Description and In-Service Support Equipment for the Mk 48 ADCAP Torpedo*, SW513-EO-MMO-010. Exposure to oxides of nitrogen, even at low levels, presents a particularly deceiving hazard. It will cause an abnormal accumulation of fluid in the lungs. This then results in swelling of tissue and a difficulty in breathing generally occurring 18 to 26 hours after exposure.

Following a torpedo run, the afterbody will be vented and flushed. If the HCN reading exceeds 40 ppm, this operation will be conducted in an open area to eliminate and neutralize the residual gases and acid. The flushing fluid will be stored in a container equipped with a trap or a vent to the outside. Special safety precautions to be followed during the flushing operations are contained in *Torpedo Mk 48 all Mods, Weapon System Description for the Mk 48 Torpedo*, OP 40200; *Torpedo Mk 48 Assembly, Test and Turnaround*, OP 4024, Volume 1 for the Mk 48 Torpedo; and *Torpedo Mk 48 ADCAP On-Line Procedures*, SW513-EO-MMA-010, *Torpedo Mk 48 ADCAP Weapon System Description and In-Service Support*, SW513-EO-PRO-010; and *Torpedo Mk 48 ADCAP Off-Line Procedures*, SW513-EO-PRO-020, for the Mk 48 ADCAP torpedo. Just as hazardous as the Otto Fuel II threat are the various dangers presented by electricity.

ELECTRICAL

To prevent injury or death to personnel from electrical shock and fire hazards when operating and servicing electrical and electronic equipment, you must observe standard safety precautions specified in OPNAVINST 5100.23. Before servicing or adjusting equipment, disconnect power supplies and discharge capacitors. Do not wear metallic jewelry of any kind. In addition, ensure another person qualified to administer artificial resuscitation is present.

HANDLING EQUIPMENT

To prevent injury to personnel and damage to equipment, detailed work sheets have been developed to provide procedures for using handling equipment during torpedo maintenance or transfer. You must observe the weight limits of hoists, chainfalls, cranes, cables, slings, and other lifting equipment. An on going inspection of cables and slings for frayed or broken strands and for crimps before each use is a must. Do not allow personnel to stand directly under a loaded crane or hoist. Maintenance required for handling equipment, including the periodic testing for load carrying capacity, is specified in *Management of Weight Handling Equipment Maintenance and Certification*, NAVFAC P-307 (Ashore), and *Ammunition and Explosives Ashore, Safety Regulations for Handling, Storing, Production, and Shipping*, OP 5, Vol 1, chapter 8.

TORPEDO MAINTENANCE

The objective of the torpedo maintenance concept is to provide maximum weapon system availability with a minimum requirement for maintenance at the user level.

ITEM CLASSIFICATION

Each item within a torpedo group is classified for logistic and maintenance purposes as a functional item replacement (FIR), repairable spare, a nonrepairable spare, or an expendable item. This classification indicates replacement and repairability considerations for each item within the torpedo. The classifications are defined as follows:

FIR—An item that can be identified as faulty by test or inspection at the intermediate maintenance level. Defective items must be returned to a depot for repair, refurbishmemt, or other disposition.

Repairable spare—This item can be identified as faulty by test or inspection at the intermediate maintenance level. If repairs are required beyond the scope of intermediate level maintenance, the item must be returned to a depot.

Nonrepairable spare—This item can be identified as faulty by test or inspection at the intermediate maintenance level. Defective items are discarded.

Expendable—This item is replaced routinely without test or inspection as dictated by intermediate level maintenance documentation.

Digitized by Google

MAINTENANCE INFORMATION

Preparation and maintenance information for warshot and fleet exercise torpedoes is provided in job sheets and flow diagrams in applicable technical manuals for the MK 48 and Mk 48 ADCAP torpedoes. Each job sheet is a removable pamphlet containing step-by-step instructions for performing a specific torpedo job task. The flow diagrams show the sequence of tasks to be performed to accomplish a specific torpedo preparation or maintenance operation. Flow diagrams are provided for the following torpedo operations:

1. Warshot torpedo preparation
2. Fleet exercise torpedo preparation
3. Warshot torpedo verification
4. Fleet exercise torpedo turnaround
5. Backhaul-warshot torpedo turnaround
6. Backhaul-exercise torpedo turnaround
7. Coldshot-exercise torpedo turnaround
8. Warshot-to-exercise torpedo conversion
9. Exercise-to-warshot torpedo conversion

Shore-based ASW shops are capable of all fleet exercise and warshot torpedo preparation and maintenance.

Troubleshooting information is contained in the applicable technical manuals for the Mk 48 and the Mk 48 ADCAP torpedoes.

HEAVYWEIGHT TORPEDO MAINTENANCE CONCEPT

Under this plan, specific maintenance functions have been authorized for each level and are depicted in table 3-1. Torpedo maintenance at the organizational and intermediate levels for both the Mk 48 torpedo and its associated workshop support equipment (WSE) is currently being provided by two facilities: the Naval Undersea Warfare Engineering Station (NUWES), Keyport; and Westinghouse Electric Corporation (WECO), Logistics and Support Department, the prime contractor. Depot level support for the unique portions of the Mk 48 ADCAP torpedo and torpedo hardware common to the Mk 48 torpedo is provided by NUWES, Keyport.

Table 3-1.—Heavyweight Torpedo Maintenance Concept

WEAPON SYSTEM ELEMENT	o ORGANIZATIONAL x RFI Activity	o INTERMEDIATE	o DEPOT x MRF
Heavyweight Torpedo	o x Inspection	o System Checkout	o x FIR Unit Repair
	o x Storage	o Subsystem Checkout	o x ORDALT Accomplishment
	o x Handling	o Fault Isolate to FIR/Component Level	o Shell Repair
	o Tube Loading	o FIR/Component Replacement	
	o Prelaunch Check	o Disassembly/ Assembly	
	o Command Control Wire Splicing	o Cosmetic Repair	
	x Cosmetic Repair	o Fueling	
	o x External Cleaning/ Preservation	o TMD Installation/ Removal	
	o x TMD Installation/ Removal	o ORDALT Accomplishmemt	
	o x A-cable Installation/ Removal	o Pingers	
	o x Preventive	o RFI Storage/ Maintenance Issue	

Digitized by Google

Table 3-1.—Heavyweight Torpedo Maintenance Concept—Continued

WEAPON SYSTEM ELEMENT	o ORGANIZATIONAL x RFI Activity	o INTERMEDIATE	o DEPOT x MRF
Warhead Mk 107 Mods 0/1/2	None	o Subsystem Checkout	o x FIR Unit Repair
		o Fault Isolate to FIR/Component Level Replacement	o x ORDALT Accomplishment
		o EAW/WES Installation	
		o Disassembly/ Assembly	
		o Exploder/Arming Device Installation	
		o Vacuum/Freon Leak Testing	
Exercise Head Mk 88 Mods 2/3/4, Exercise Head Mk 92 Mod 0 or FES Mk 94/0	None	o Subsystem Checkout	o Page Assembly Repair
		o Data Reduction	o Harness/Cable Repair
		o Fault Isolate to Page Assembly	o x ORDALT Accomplishment
		o Page Assembly Replacement	
		o Disassembly/ Assembly	
		o ORDALT Accomplishment	
WSE and ISSE	None	o Fault Isolate to Circuit Card/ Component Level	o x Component Card Replacement
		o Preventive Maintenance	o Circuit Card
		o Circuit Card/ Component Replacement	o ORDALT Accomplishment
		o ORDALT Accomplishment	

Digitized by Google

Table 3-1.—Heavyweight Torpedo Maintenance Concept—Continued

WEAPON SYSTEM ELEMENT	o ORGANIZATIONAL x RFI Activity	o INTERMEDIATE	o DEPOT x MRF
Reusable Containers	None	o Replace Minor Mechanical Components o Replace Expendables o Storage	o Replace Major Components o Structural Repairs

Abbreviations:

EAW —Electronic Assembly Warhead
FIR —Functional Item Replacement
ORDALT—Ordnance Alteration
MRF —Minor Repair Facility
WSE —Workshop Support Equipment
RFI —Ready-For-Issue
TMD—Torpedo Mounted Dispenser
FES —Fleet Exercise Section
ISSE —In-Service Support Equipment
WES —Warhead Electronic System

Before continuing on, let's take a moment to review Otto Fuel II, electrical and handling equipment safety.

Torpedo maintenance is accomplished by Navy personnel at the organizational and intermediate levels. The contractor provides depot level maintenance for both the torpedo and automated test equipment. The Naval Undersea Warfare Engineering Station (NUWES), Keyport, Washington, provides depot level maintenance on all other equipment.

Torpedo system maintenance is classified as either remedial, turnaround, or preventive.

Remedial maintenance is done on a nonscheduled basis and consists of restoring the torpedo, automatic test equipment, and other support equipment to a satisfactory condition after malfunctioning, experiencing damage, or deterioration. This maintenance involves expendable, spare, and FIR item replacement. With the exception of torpedo inspections and corrosion prevention measures, there is no remedial maintenance at the organizational and ready for issue (RFI) support levels.

Turnaround maintenance refers to exercise turnaround and warshot verification. Turnaround maintenance is performed at intermediate level activities. The maintenance includes refurbishing the torpedo to an operational condition after exercise runs and installation of replacement parts for expended or deteriorated items. Warshot torpedoes are periodically verified for operational readiness.

Preventive maintenance is performed on a routine basis and is intended to minimize equipment failures through recognition and correction of potential problems before they occur. This maintenance consists primarily of routine cleaning, inspection, and readiness verification testing. Preventive maintenance of workshop equipment also includes lubrication, calibration, and minor adjustments.

ORGANIZATIONAL LEVEL MAINTENANCE

Submarines and Ready-for-Issue (RFI) support activities comprise the organizational maintenance level. It is intended that only limited corrective maintenance be accomplished at the organizational level. Accordingly, onboard torpedo maintenance is limited to visual inspection; exterior cleaning; A-cable installation and removal; guide stud, guide and bearing plate installation and removal; and command wire splicing. Organizational level personnel also perform weapon stowage, handling, tube loading, and pre-launch checks.

Torpedoes retrieved during exercise operations are required to be washed down with fresh water to prevent corrosion damage. The torpedo should be returned to a flushing facility for postrun preservative flushing within 3 days after recovery.

Digitized by Google

If the torpedo cannot be given a preservative flushing, it must be returned to an intermediate level maintenance activity (IMA) in sufficient time to allow for engine teardown within 9 days after recovery. If a torpedo receives a preservative flushing after retrieval, the maximum interval between torpedo firing and turnaround is 21 days.

Submarine Maintenance

Some of the specific maintenance that you might expect to perform while onboard a submarine would be: receipt\transfer inspection, A-cable removal-replacement-and installation, torpedo mounted dispenser (TMD) installation, communication wire troubleshooting, and splicing on both the torpedo and TMD sides.

Torpedoes that have been exposed to seawater or stored in a flooded or dry tube will be cleaned and inspected at weekly intervals; whereas torpedoes stowed in rails/cradles receive only monthly cleaning and inspection. Any torpedo that does not satisfy prelaunch checkout requirements will be removed from the tube and returned to rack stowage for subsequent transfer to an IMA.

Heavyweight torpedoes and TMDs are susceptible to corrosion damage, which may not be detectable by submarine personnel. This is likely to develop a requirement for expensive IMA/depot repair. Submarine personnel **must** report torpedoes that have been in a flooded-tube environment upon returning to port. This is accomplished with a corrective maintenance/deficiency report being submitted. Additionally they will record appropriate torpedo history sheet entries in accordance with instructions contained in section 8 of NAVSEA OD 45814.

Detailed descriptions of maintenance procedures authorized for submarine personnel are contained in the appropriate volume of OD 44979 and in maintenance requirement cards (MRCs).

Ready-For-Issue Support Activities

Submarine tenders (AS) and specified shore facilities perform Mk 48 and Mk 48 ADCAP torpedo handling, stowage, emergency defueling, and minor cosmetic repair. These activities are organizational level in nature, but have been designated as RFI support activities. They perform authorized torpedo support for the Mk 48 torpedo in accordance with *Torpedo Mk 48 Assembly, Test and Turnaround*, Volume 3, OP 4024. Mk 48 ADCAP torpedo evolutions will be performed in accordance with *Torpedo Mk 48 ADCAP Piece Part Inspection Procedures*, SW513-EO-PRO-030.

Some examples of the specific maintenance you might be expected to perform onboard an RFI facility would be: preparing a weapon for issue or stowage, torpedo inspections (warshot and exercise), afterbody\tailcone inspection, TMD inspection, removal, installation, packing and unpacking, guide stud assembly\bearing plate\guide inspection, turnaround, and installation, TMD and torpedo wire splicing, wire splice and flex-hose connection, A-Cable turnaround, installation and removal.

If corrective maintenance were to be performed, you would be responsible for the removal, inspection, and installation of the guide stud assembly, bearing plate or guide, repair to damages or defects to the transducer or torpedo shell, and the replacement of defective TMDs.

INTERMEDIATE LEVEL MAINTENANCE

Production and maintenance at IMAs include warshot and exercise preparation, warshot verification, exercise teardown/turnaround, exercise to warshot and warshot to exercise conversions, weapon stowage, fault isolation, and corrective maintenance performed down to the FIR/replaceable component level. The extent of weapon disassembly and depth of testing depend on the condition of the torpedo upon receipt at the IMA; for example, an exercise fired unit will normally require a greater degree of maintenance than an unused exercise or warshot unit returned from stowage onboard a submarine.

Each IMA is equipped with individual maintenance lines of workshop support equipment (WSE), along with requisite utility services necessary to accomplish both on-line testing and off-line service and maintenance tasks. They are capable of performing all Mk 48 torpedo maintenance as defined in OP 4024, Volumes 1 and 2. Mk 48 ADCAP torpedo maintenance is defined in SW513-EO-PRO-010 and SW513-EO-PRO-020.

Procedures for servicing the torpedo are described in detail on job sheets and flow diagrams. So, let's take a moment to review how to use the job sheets and flow diagrams.

Job Sheets

Job sheets give you step-by-step directions for performing particular tasks. Flow diagrams program the tasks described by the job sheets into sequences designed to change incoming components or torpedoes into ready-to-fire torpedoes of a preplanned configuration (warshot or exercise).

Figure 3-1 shows the first page of a typical job sheet. The first page of the job sheet contains a

Digitized by Google

JOB SHEET P–35
SPEED CONTROL VALVE REMOVAL AND INSTALLATION

WARNING

If exercise turnaround or warshot verification is being performed, OTTO Fuel II will be encountered. This job sheet must then be performed in a well ventilated area. Personnel must wear all safety clothing listed under common requisites, and observe all applicable safety precautions. When OTTO Fuel II is not encountered, protective clothing is not required.

MATERIALS

COMPONENTS

Packing, preformed, Dwg. 2502774-4
Packing, preformed, Dwg. 2502774-5
Packing, preformed, Dwg. 2502774-30
Pump, fuel, Dwg. 2064208 (with speed control valve installed) or
Pump, fuel, Dwg. 2064208 (less speed control valve)
Screw, socket head, MS16998-33 (4)
Valve assembly, speed control, Dwg. 2507319
Washer, Dwg. 2498489-1 (4)

SPECIAL REQUISITES

Pad, workbench, Dwg. C70528

COMMON REQUISITES

Adapter, 3/8 M x 1/4 F
Apron, neoprene (or equivalent)
Boots, neoprene (or equivalent)
Coveralls, disposable
Gloves, neoprene (or equivalent)
Goggles, chemical (or equivalent)
Grease, MIL-G-4343
Kit, preformed packing, extraction/installation
Ratchet, 3/8 sq dr
Swabs, cotton tipped
Wrench, hex head, 5/32 x 3/8 sq dr
Wrench, torque, 75-0-75 lb-in 1/4 sq dr

P-35-1 SPEED CONTROL VALVE ASSEMBLY REMOVAL

1. Using 5/32-in hex head wrench and ratchet, remove four socket head screws and washers securing speed control valve to fuel pump, Figure P-35A.

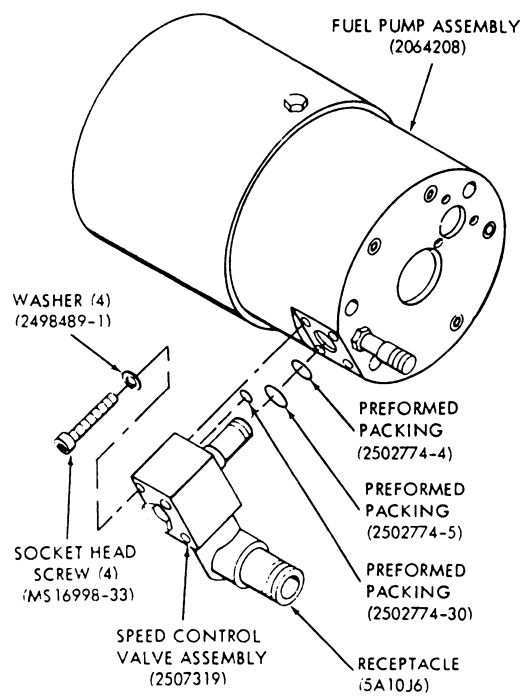

Figure P-35A Speed Control Valve Removal/Installation

Figure 3-1.—First page of a typical job sheet.

Digitized by Google

list of materials required to do the job. Materials on the list are separated into components, special requisites, and common requisites. Components are parts of the torpedo to which the job sheet relates. Special requisites are the tools or equipment unique to the Mk 48 or the Mk 48 ADCAP and are designed or modified especially for these units. Common requisites are commercial tools or equipment normally stocked in an intermediate level workshop.

The first illustration in a job sheet is an overall view to orient the user to the task the job sheet describes. Additional illustrations are used as required to clarify complex stages of the task. Important details and parts to be removed or replaced are shown in exploded views. All components shown are identified by part number. In this manner, the drawing assists the maintenance personnel in identifying parts to be replaced.

The text of a job sheet instructs the user in the completion of the task by describing the use of designated tools and referring to the illustrations. Each step to be taken is fully described and numbered for easy reference. A job sheet may include more than one job, if jobs are functionally related. For example, whenever removal and installation of a component involve the same materials and can use the same illustration, they are combined into one job sheet.

At the discretion of the commanding officer or weapons officer, subheads within job sheets may be performed in any technically correct order, provided that the sequence of accomplishment is documented as being authorized by the commanding officer or weapons officer before the start of the job sheet.

Some job sheets may direct the worker to replace\reject an item if it fails during the testing process. IMAs are encouraged to determine if the failure can be corrected by turnaround of the unit a second time vice returning it to the depot for repair.

Where required, job sheets contain quality assurance sheets for use by the quality assurance organization. This ensures that only safe reliable weapons are issued.

You should use and follow job sheets at all times regardless of how proficient you may become.

Quality Assurance

The complexity of the Mk 48 and the Mk 48 ADCAP torpedoes dictates the need for a viable quality assurance program at the preparing activity level to ensure that only reliable weapons are issued to the fleet. To provide quality effort at all IMAs and have it uniform throughout, quality requirements are included in technical manuals used by the IMA during maintenance of the torpedo. They are basic requirements necessary to produce a weapon that will provide the highest probability of mission accomplishment. A NAVSEASYSCOM publication, *Heavyweight Torpedo Intermediate Maintenance Activity Quality Assurance Manual*, has been prepared as a uniform single-source document for all Mk 48 and Mk 48 ADCAP torpedo IMAs. This manual contains the policies and requirements that must be enforced at all levels of production to ensure that the torpedo will successfully complete its mission.

Quality assurance (QA) procedures and verification points used during maintenance of the torpedo are based on the minimum quality effort necessary to verify that significant operations have been properly accomplished. This effort provides a high degree of confidence in weapon reliability with the least amount of interference in normal shop operations.

When you are assigned as one of the maintenance personnel, you must do each operation in the order displayed on the flow charts and as instructed by the job sheets, and you must honor all hold and verification points. The QA inspector must verify all significant operations at QA hold points.

Job sheets, which require quality assurance, contain hold points indicated by a **STOP** symbol. The **STOP** symbol is located before the steps requiring sign-off, or at a point where the inspector must verify a number of completed operations before processing can continue. You must stop performing the maintenance where the symbol appears. You may assume maintenance procedures after an inspector has signed the appropriate column on the QA sheet. When consecutive QA steps are listed on a QA sheet, only a single stop point preceding the initial QA inspection point is required. When the job sheet states "Initial QA Sheet," you would stop work and sign the initial column of the step just completed before proceeding with the work. If the job sheet contains a test where no printed record is made, an inspector may be called on to witness the test.

There are no specific QA hold points on individual job sheets that call for a general inspection of components before assembly. The

Digitized by Google

inspection is performed by you during disassembly and cleaning operations. Quality assurance personnel will, however, verify the condition of the hardware at QA hold points or periodically through roving inspections. Suspect areas found by the inspector should be brought to the attention of shop personnel.

The assembly serialization and quality assurance sheet is used to indicate the job sheet section and step number where quality hold points or verifications are to occur, and provides space to record assembly serial numbers where required. The sheet also provides for the initialing by the individual doing the work and the quality assurance inspector. After completion, the sheet is signed by the assembly supervisor and the quality assurance supervisor. Figure 3-2 is an assembly serialization and quality assurance sheet used during turnaround of the water intake valve.

Flow Diagrams

A flow diagram is a pictorial representation of the order in which events occur during torpedo maintenance. Flow diagrams show all paths that you must follow in assembling and testing the torpedo. The paths represent the work flow from one task to the next. Each path lists the job sheets for the task that must be accomplished to complete that path. Figure 3-3 illustrates an example of a typical flow diagram.

A flow diagram generally indicate the normal, uneventful course of operations. A flow diagram may require deviation to troubleshooting procedures in the event of a no-go condition or other unforeseeable abnormal situation. Troubleshooting and no-go correction procedures are contained in the applicable manuals for both the Mk 48 and Mk 48 ADCAP. Obviously, every possible circumstance cannot be accommodated in the flow diagram. Therefore, it behooves the shop supervisor and quality assurance organization to be alert to unusual situations and to use their experience and judgment to bring the torpedo\ group \component to a condition that will reestablish the normal flow pattern as expeditiously as possible. Special symbols used in the flow diagram are as follows:

1. A parallelogram ▱ indicates material entering the process for the first time or leaving the process for the last time. Input items are materials necessary for assembly or testing. Output items may be for issue, stowage, or shipment to a depot. Arrows indicate whether the item is input or output.

REGISTER NUMBER		
SECTION	SERIALIZATION AND/OR QUALITY ASSURANCE STEP	INITIALS OR SERIAL NO.
P-5-1	Step 32 - Locknut torqued to 16 ± 2 in-lb	
	Step 37 - Plug torqued to 240 ± 10 in-lb	

ASSEMBLY SUPERVISOR: _____ NAME _____ DATE _____ ACTIVITY

QA SUPERVISOR: _____ NAME _____ DATE _____ ACTIVITY

Figure 3-2.—Assembly serialization and QA sheet.

Digitized by Google

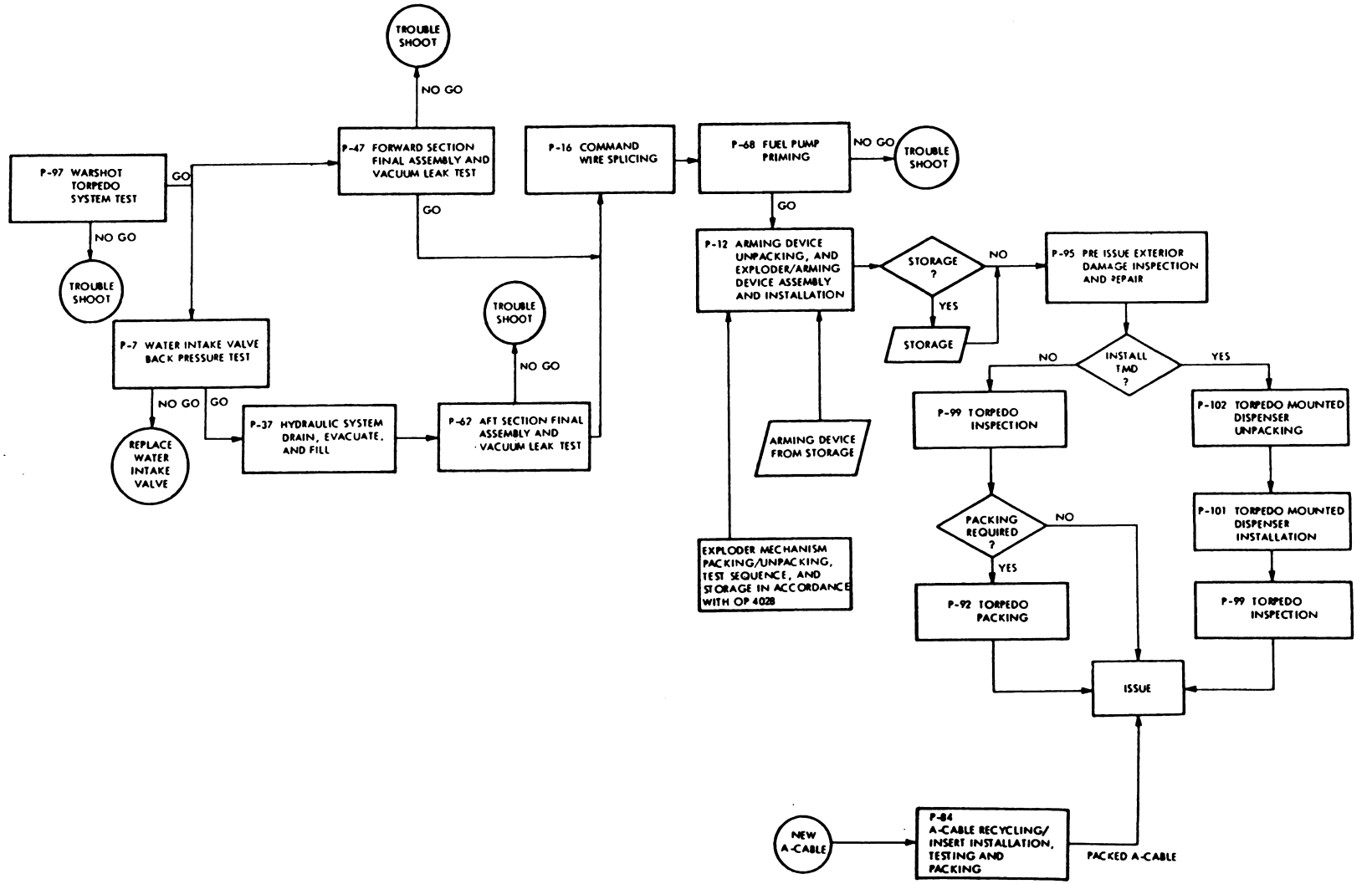

Figure 3-3.—Typical flow diagram.

Digitized by Google

2. A diamond ◊ indicates a decision point. It asks a question that can be answered yes or no. The answer chosen indicates the branch of the flow diagram to be followed.

3. A rectangle ▭ usually indicates an operation to be performed as indicated by the job sheet or part of a job sheet listed within the rectangle. Occasionally, several related operations are listed in one rectangle. Operations so listed can be done in any sequence, or unless limited by capacity of equipment, can be done simultaneously. On rare occasions, rectangles direct the reader to execute procedures that are contained in another OP.

4. A circle ○ indicates a break in the flow. The note within the circle identifies the point at which the flow is picked up, whether elsewhere on the same diagram or at some point on another diagram.

5. An arrow ⟶ indicates direction of flow. Branching paths indicate simultaneous or mutually independent operations, all of which must be performed.

Let's take a moment here to further your understanding of the maintenance that you may one day be performing at an IMA facility. To fully understand the different sections that we are discussing, let us look at the torpedo group configuration for the Mk 48 (fig. 3-4), and the

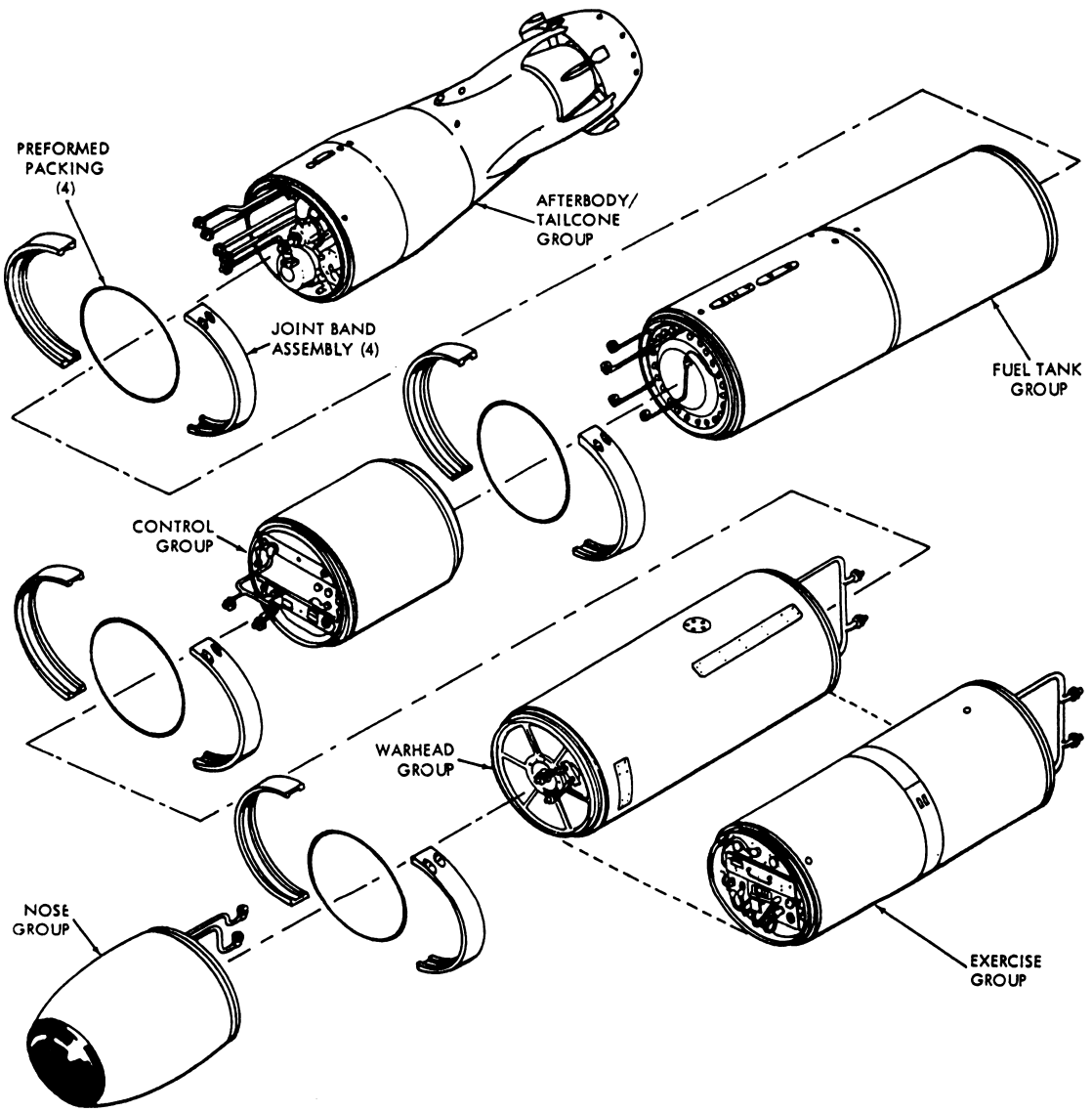

Figure 3-4.—Mk 48 torpedo group configuration.

Digitized by Google

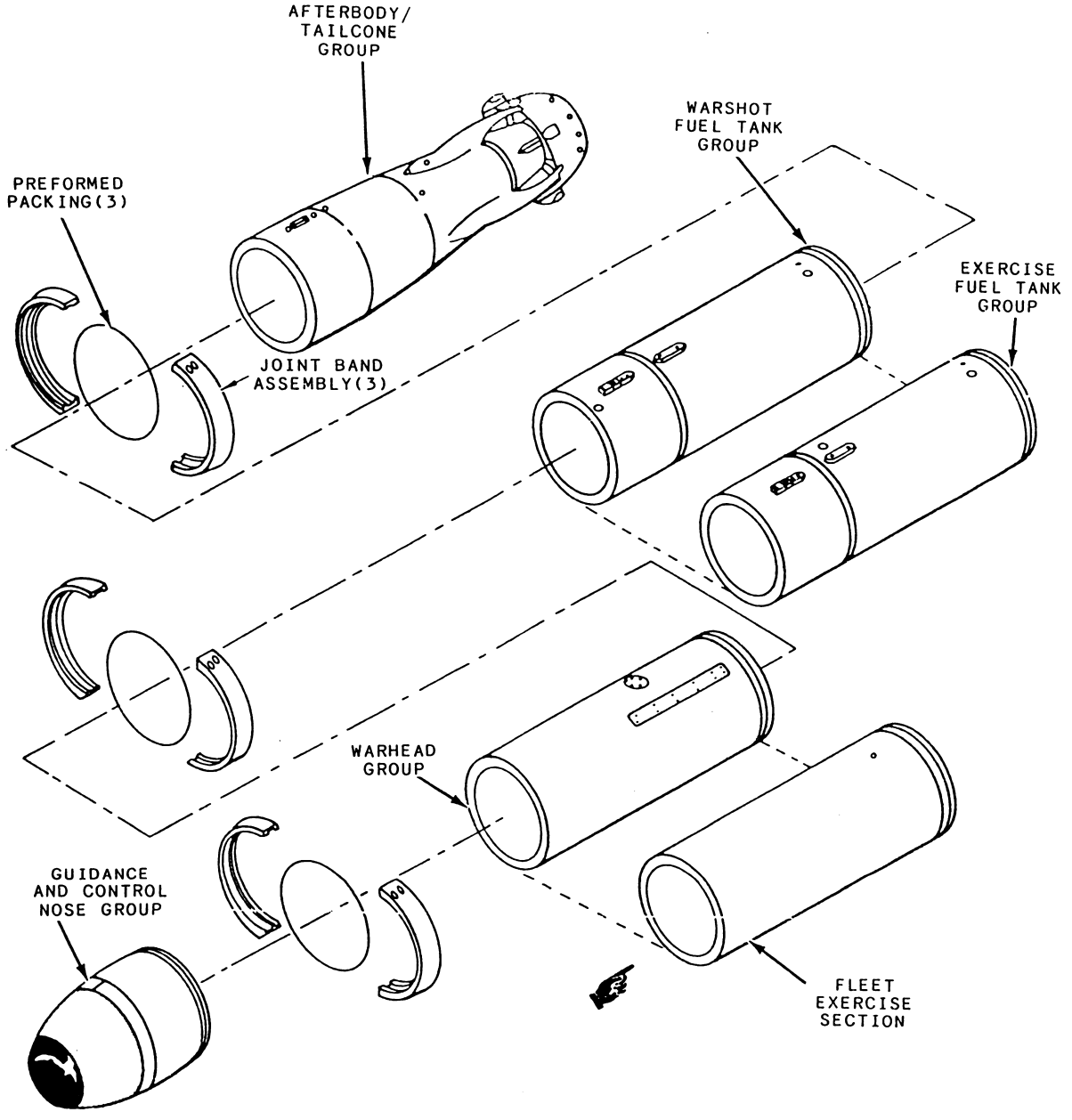

Figure 3-5.—Mk 48 ADCAP torpedo group configuration.

Mk 48 ADCAP (fig. 3-5). Now that we have looked at the two figures, we can visualize the groups as we discuss them. Let's get started.

We will use the Mk 48 as an example when discussing the maintenance, and when it is feasible, we will cover some of the differences between the Mk 48 and Mk 48 ADCAP. But due to the general nature of this book, this may not always be possible.

Nose Group

The first group we will discuss is the nose group (fig. 3-6) for the MK 48.

Before your initial torpedo assembly for system test, all nose group FIR units and cables

Digitized by Google

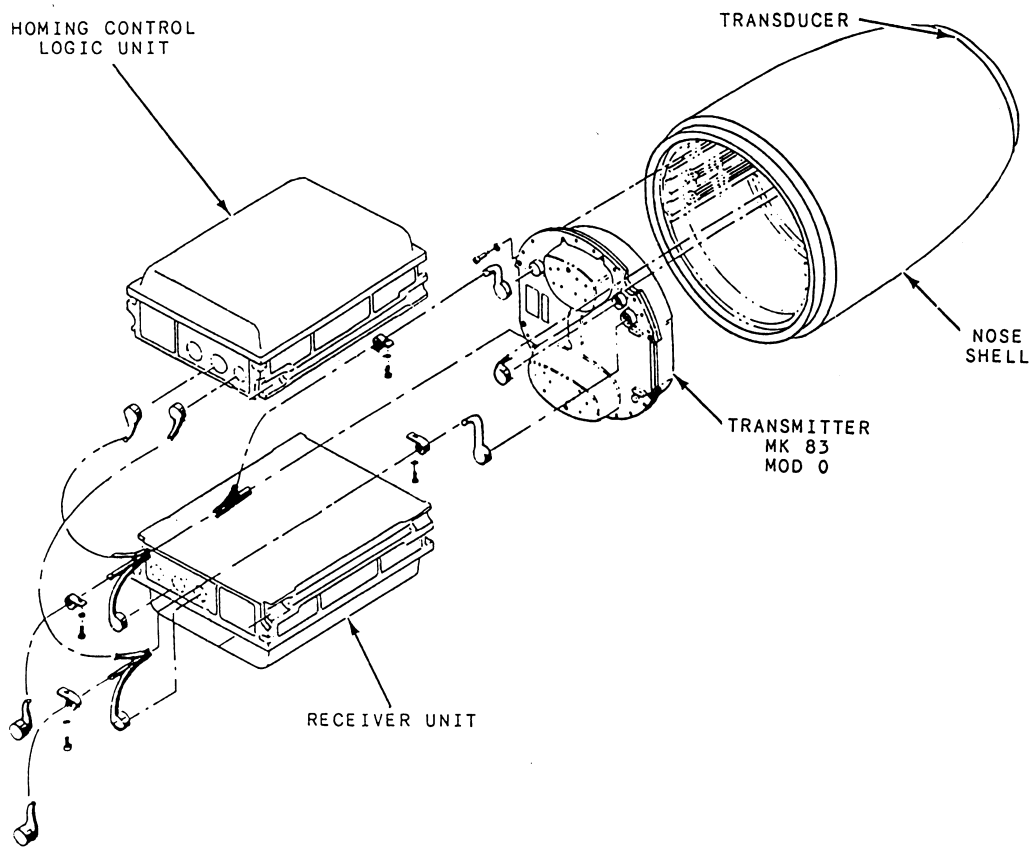

Figure 3-6.—Mk 48 nose group.

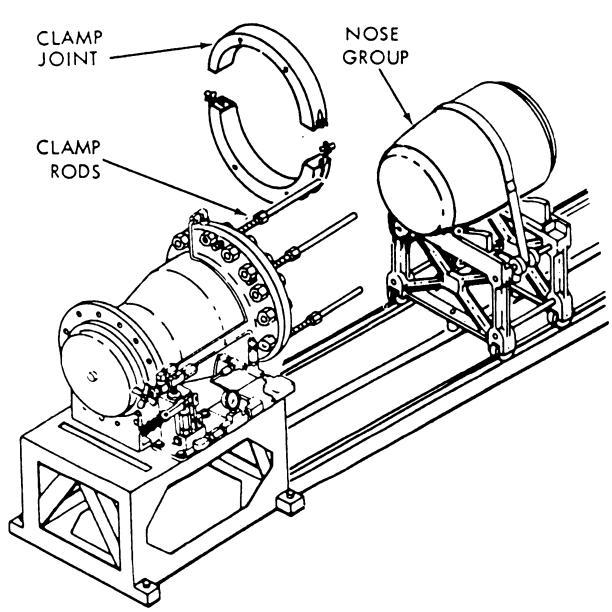

Figure 3-7.—Nose group in acoustic test stand.

are tested. Cables are checked using the applicable cable test set. FIR units are checked using the applicable system test set (ATE). The cables must be removed from the nose group and be installed on the cable test set for proper testing.

The transducer unit may be tested while installed or may be removed from the nose shell. The transducer unit is tested with the ATE. The ATE includes an acoustic test stand (fig. 3-7), which is used to simulate an ocean environment during system test.

The transmitter unit can be FIR tested either while mounted in the nose shell or while separated from the nose shell. If it is tested while mounted in the nose shell, the homing control logic unit (HCL) must first be removed (if applicable) to make test cable connections.

The HCL unit must be removed from the nose shell and be placed on a rubber pad prior to testing. The rubber pad isolates the HCL case from earth ground during FIR testing.

Digitized by Google

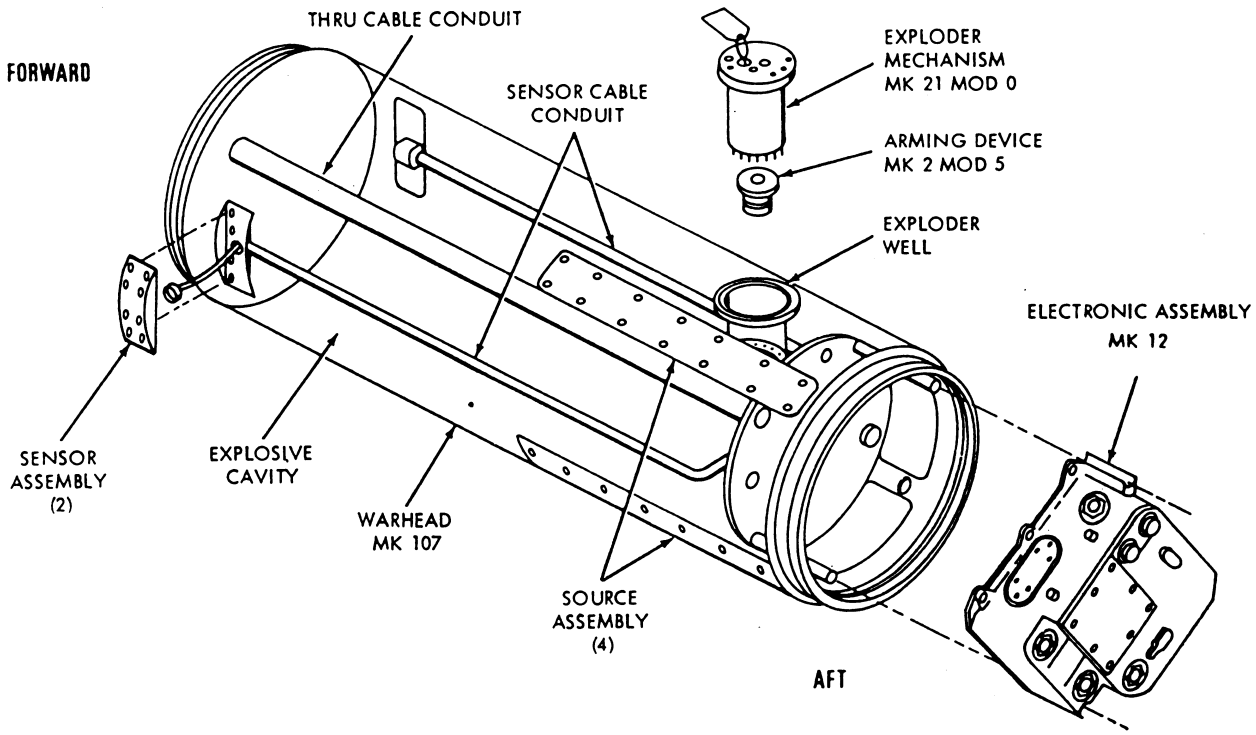

Figure 3-8.—Mk 48 warhead group.

Warhead Group

Next let's talk about the group that is responsible for inflicting damage on the enemy—the warhead group (fig. 3-8).

Before initial torpedo assembly for system test, some warhead group through cables and all FIR units are tested. Some cables are removed from the warhead group and are tested on the cable test set Mk 556 Mod 0. Cabling within the through cable conduit can be replaced by intermediate site maintenance personnel, if necessary.

The warhead, including the electronic assembly, is FIR tested using the system test set. The electronic assembly is cabled to the source and sensor assemblies and is mounted in the warhead shell for testing. The warhead coil test dolly is connected to the ATE to stimulate and monitor electronic assembly function via the source and sensor assemblies. In addition, an ATE exploder cavity adapter replaces the exploder mechanism and arming device. This adapter ensures that the warhead is safe since the adapter completes an interlock connection before FIR testing can begin. Figure 3-9 shows the warhead group FIR test setup.

The source and sensor assemblies can be replaced when required.

The exploder mechanism is FIR tested using the exploder mechanism test set Mk 525 Mod 1. The shape of the test cavity in the exploder mechanism test set Mk 525 Mod 1 ensures that the arming device is not attached to the exploder mechanism during exploder tests. The exploder mechanism will not fit into the test cavity with the arming device attached to it.

The arming device cannot be FIR tested at the intermediate maintenance level. The arming device is stored with a safety pin installed as shown in figure 3-10. An armed or defective arming device must be immediately reported to explosive ordnance disposal (EOD) personnel.

All Mk 48 and Mk 48 ADCAP torpedoes are issued by intermediate level shops with the exploder mechanism and arming device installed.

This completes our discussion of the warhead, and next we will discuss the brains of the weapon—the control group.

Control Group

If the control group FIR units (power control unit, gyro control unit, and command control

Digitized by Google

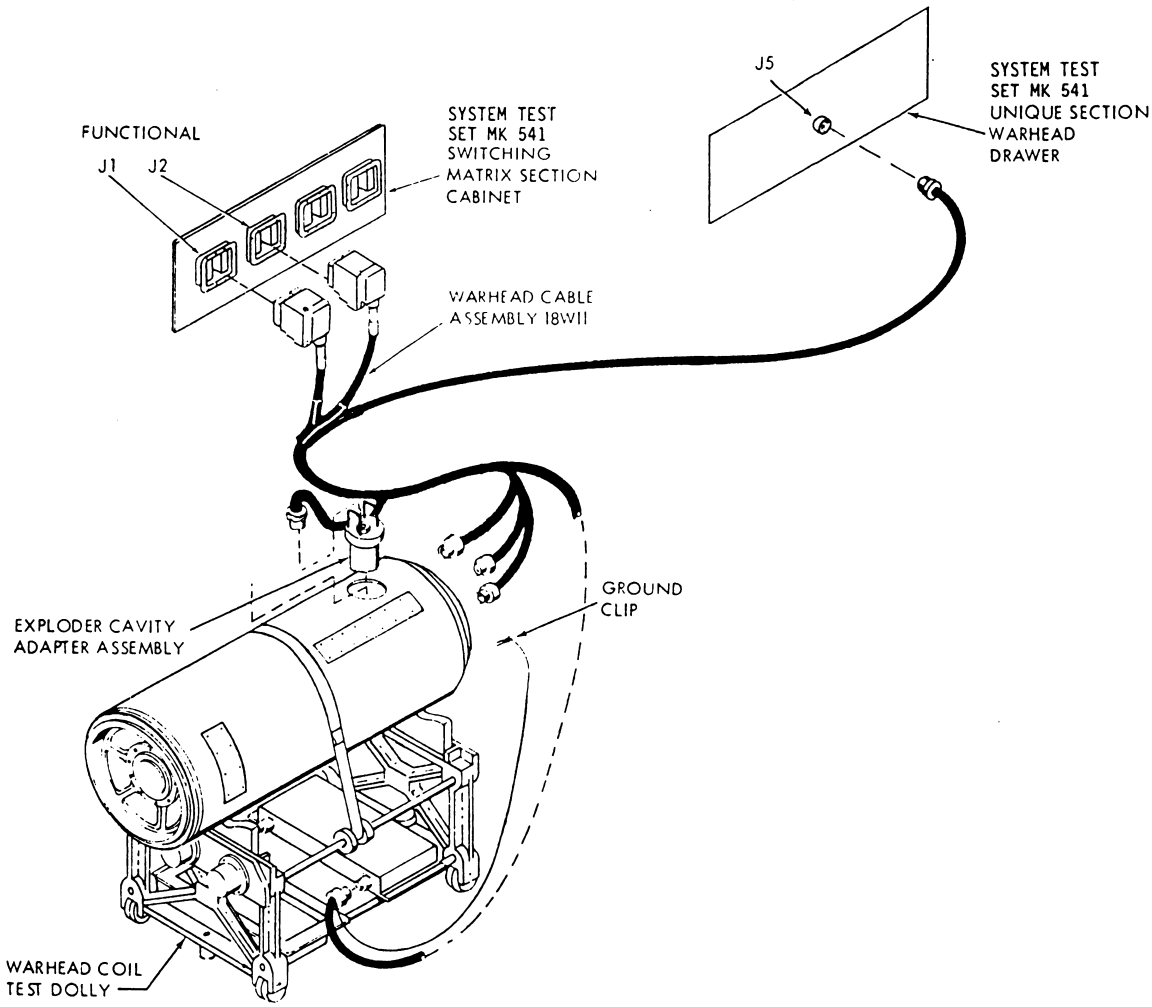

Figure 3-9.—Warhead group; FIR test setup.

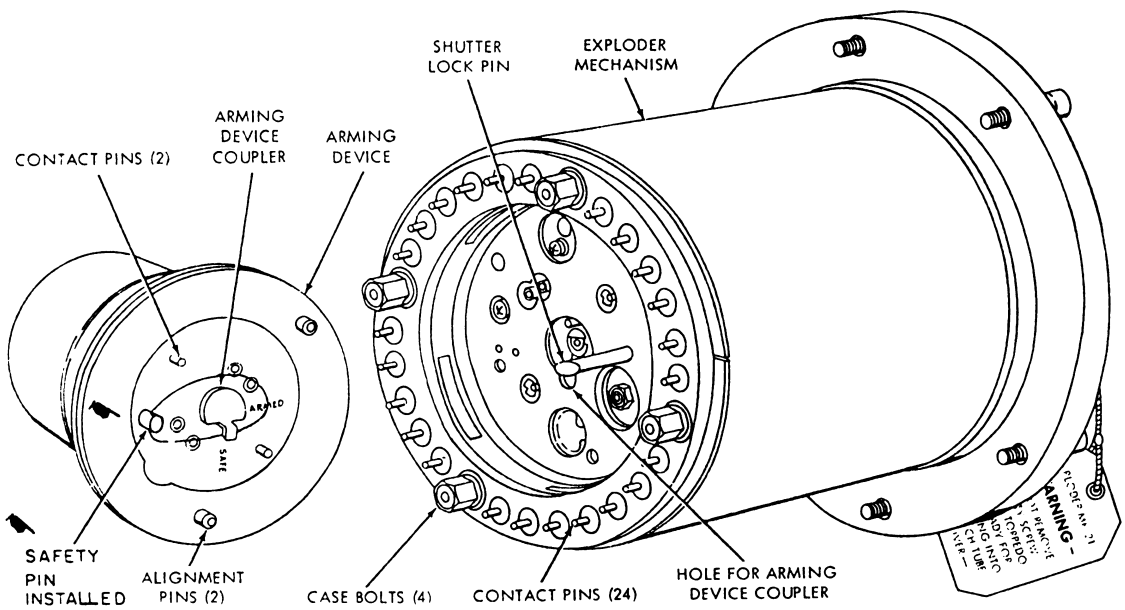

Figure 3-10.—Exploder mechanism and arming device.

Digitized by Google

unit, shown in figure 3-11) have been tested within 180 days, the group is ready for you to begin initial torpedo assembly (cabling the groups together) in preparation for the system test. If the gyro control unit requires FIR testing, the unit is removed from the group, installed on the gyro test table, and connected to the switching matrix section of the Mk 541 test set (fig. 3-12). Figure 3-13 shows the FIR test setup for the power control and command control FIR units. After

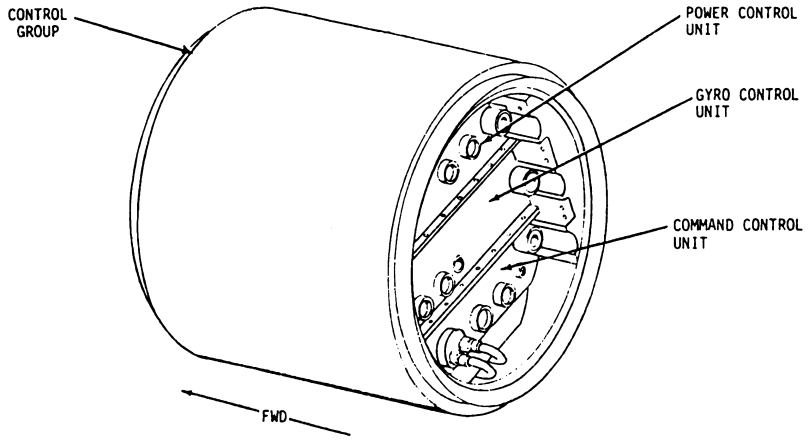

Figure 3-11.—Mk 48 control group.

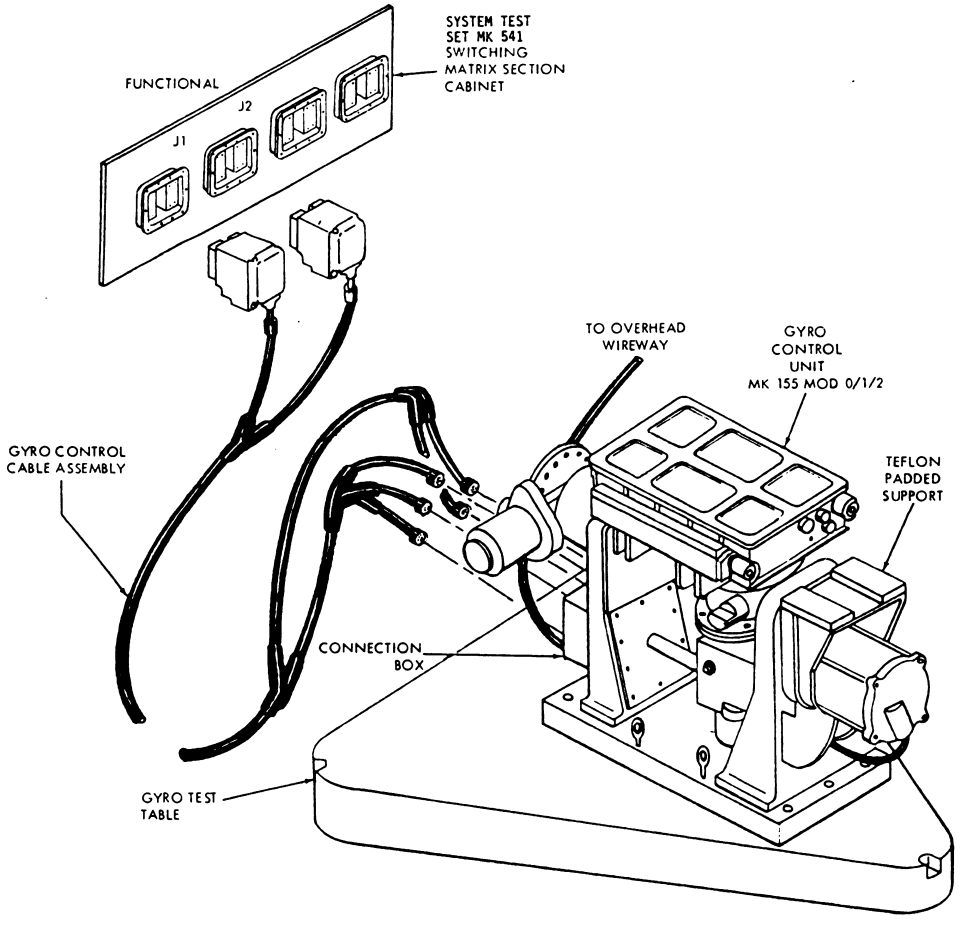

Figure 3-12.—Gryo control unit; FIR test connection.

Digitized by Google

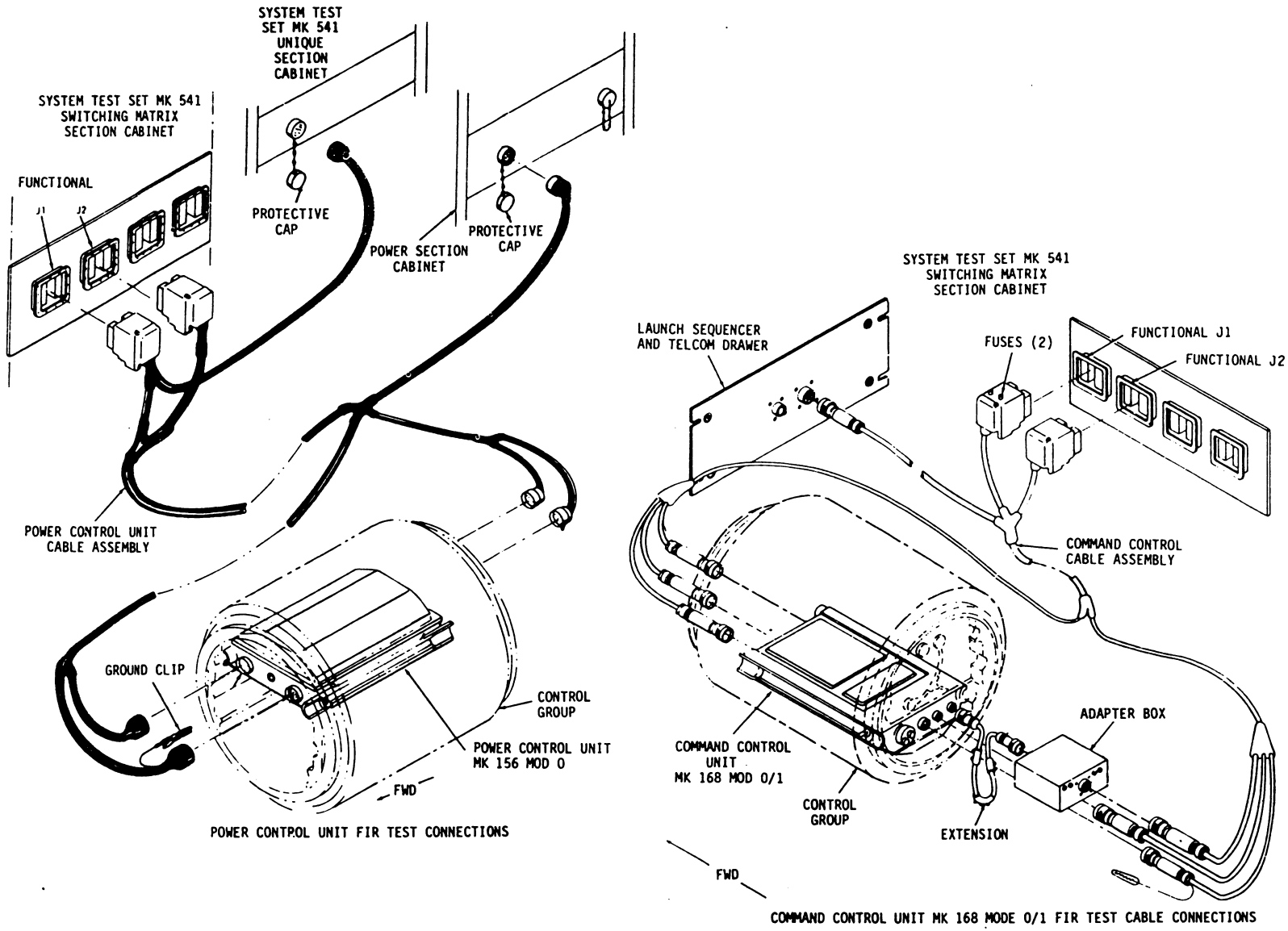

Figure 3-13.—Power control unit and command control unit; FIR test setup.

Digitized by Google

the units have been tested, the gyro control unit must be reinstalled in the control group. The control group cable assemblies must be tested with the cable test set Mk 556. They are connected during initial torpedo assembly.

Fuel Tank Group

Just like your car, the torpedo needs some type of fuel so that it can operate. The next logical area to be discussed is the fuel tank group.

Preparation of the fuel tank group for use in a warshot configuration includes you performing the following maintenance actions:

1. Installing the wire dispenser
2. Vacuum and leak testing the wire coil bulkhead
3. Testing the group cables with the Mk 556 test set
4. Vacuum leak testing the full range fuel tank
5. Monopropellant fueling
6. Performing turnaround (replacing packing and cleaning valve parts) and testing of the relief valve
7. Performing fuel leakage tests

The wire dispenser is mounted in the forward fuel tank wire dispenser chamber. A wire coil loading stand is used to support the dispenser

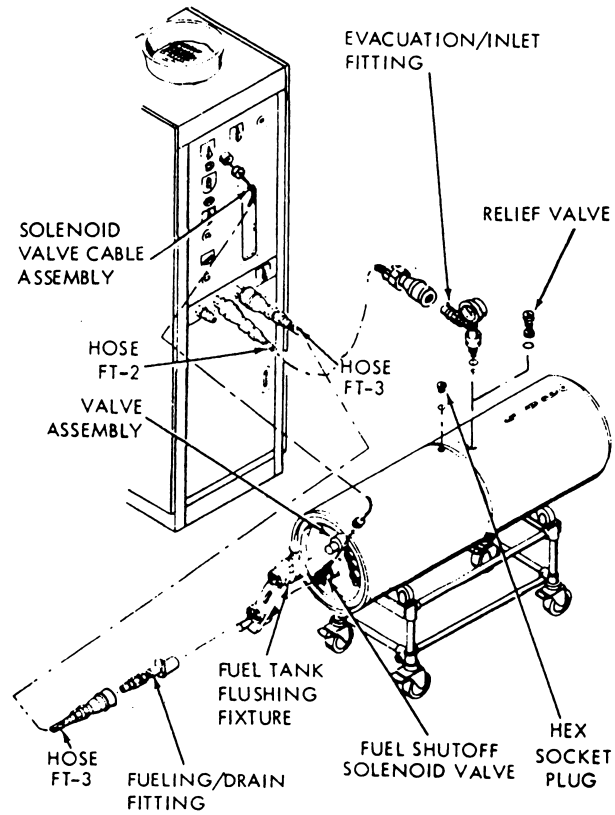

Figure 3-15.—Monopropollant fueling (warshot.)

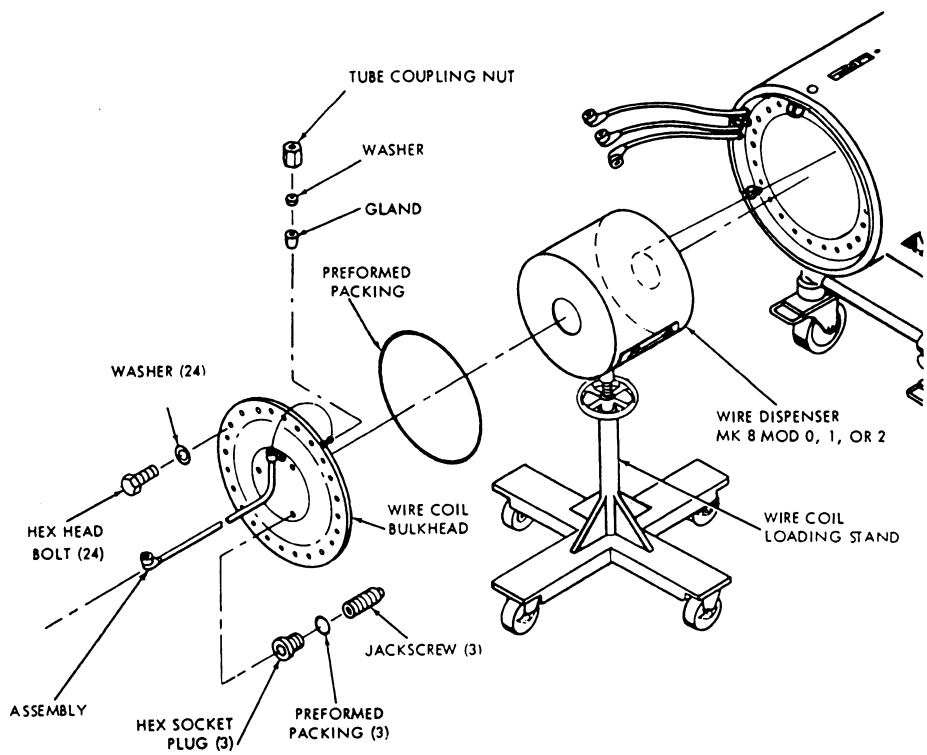

Figure 3-14.—Wire dispenser installation.

Digitized by Google

during installation (fig. 3-14). The wire dispenser is secured in place by the wire coil bulkhead. The dispenser contains a single conductor wire, which pays out from the torpedo after launch and links the launch vessel to the torpedo.

The Mk 6 Mod 0 fuel tank filling unit is used to vacuum check the wire coil bulkhead and the fuel tank compartments, and to fuel the fuel tank group. Figure 3-15 shows the fuel tank and fuel tank filling unit connections for fueling a tank to be used in a warshot configuration.

After all fueling procedures have been completed, the Mk 6 Mod 0 fuel tank filling unit is used to conduct the fuel tank cable conduit leakage test before initial torpedo assembly.

We will discuss a difference between the regular fuel tank and the extended range fuel tank. When an extended range exercise torpedo has been recovered and goes through a turnaround procedure, the aft fuel tank must be flushed prior to disassembly from the afterbody\tailcone. The fuel tank group must be defueled, cleaned, flushed out with fresh water and vacuum checked. The forward fuel tank is then refueled for another run. The flushing of the aft fuel tank is performed when the afterbody\tailcone and fuel tank group are joined together. Flushing, evacuating, and fueling of the forward fuel tank are all performed with the Fuel Tank Filling Unit Mk 6 Mod 0. Fuel tank cable tests are performed using the Cable Test Set Mk 556 Mod 0.

Afterbody\Tailcone Group

The last and possibly the most complex group we will discuss is the after\body tailcone.

To prepare the afterbody\tailcone group for a warshot (fig. 3-16), you must remove the

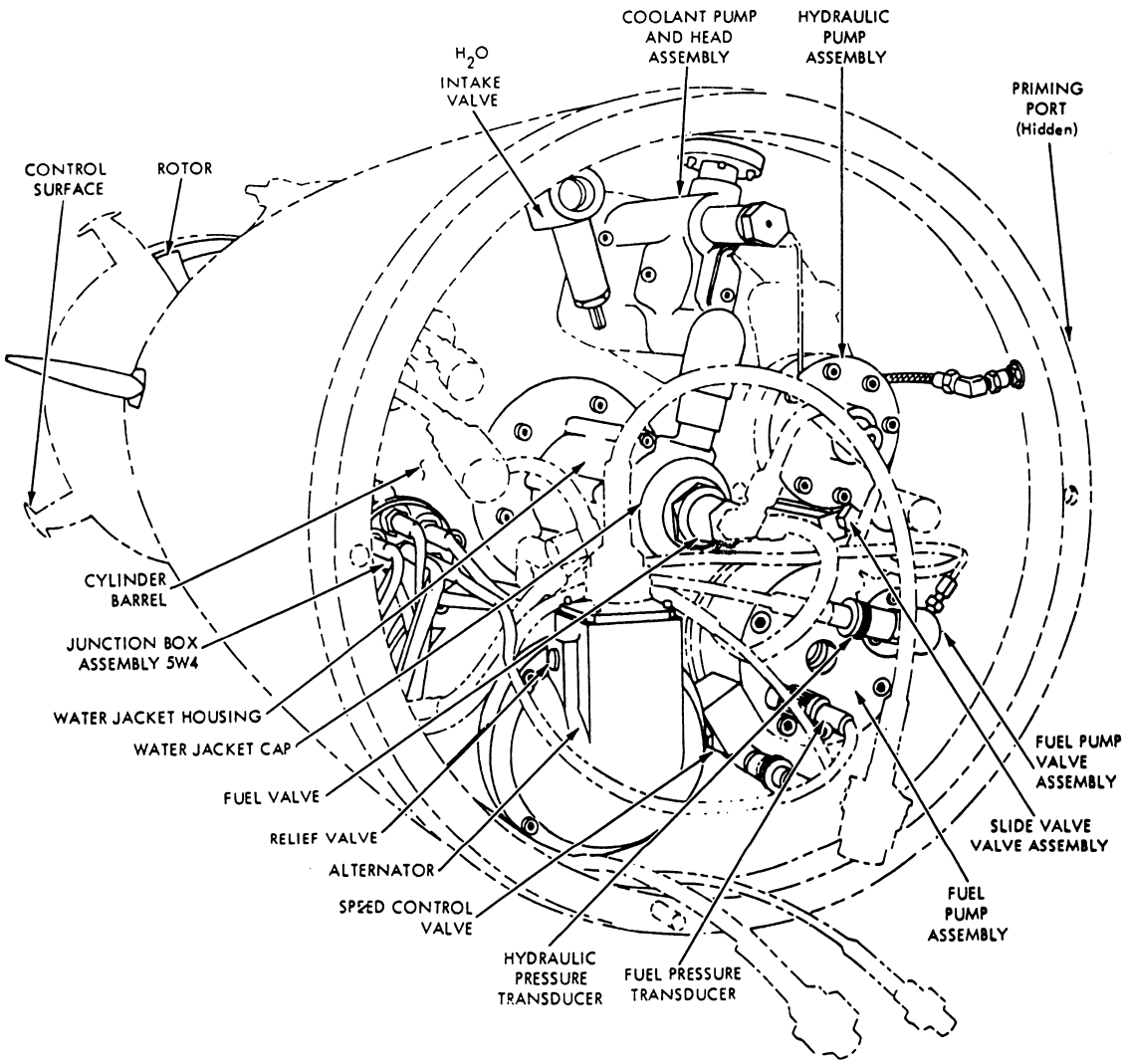

Figure 3-16.—Afterbody/tailcone group accessories.

Digitized by Google

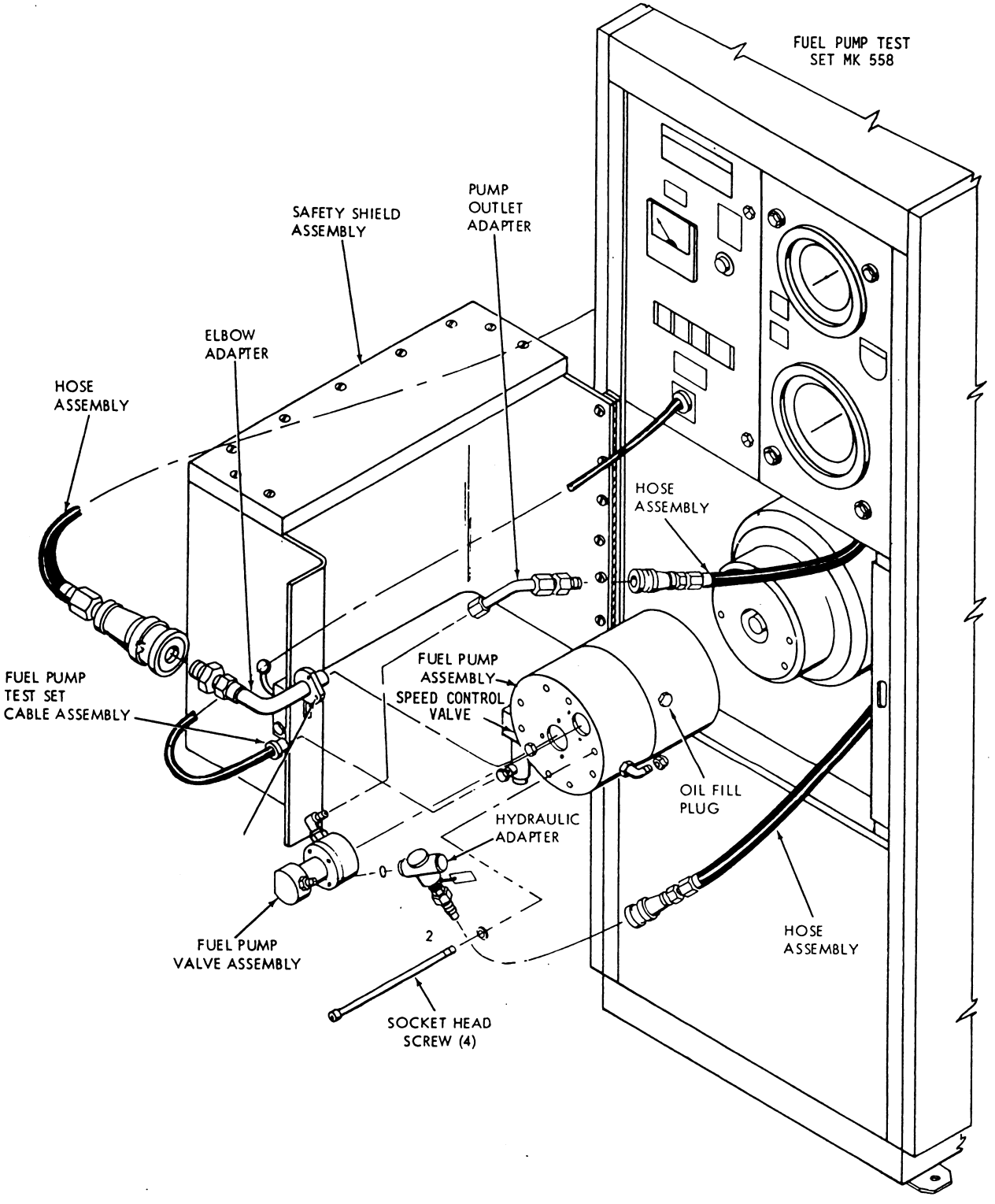

Figure 3-17.—Fuel pump/speed control valve test.

Digitized by Google

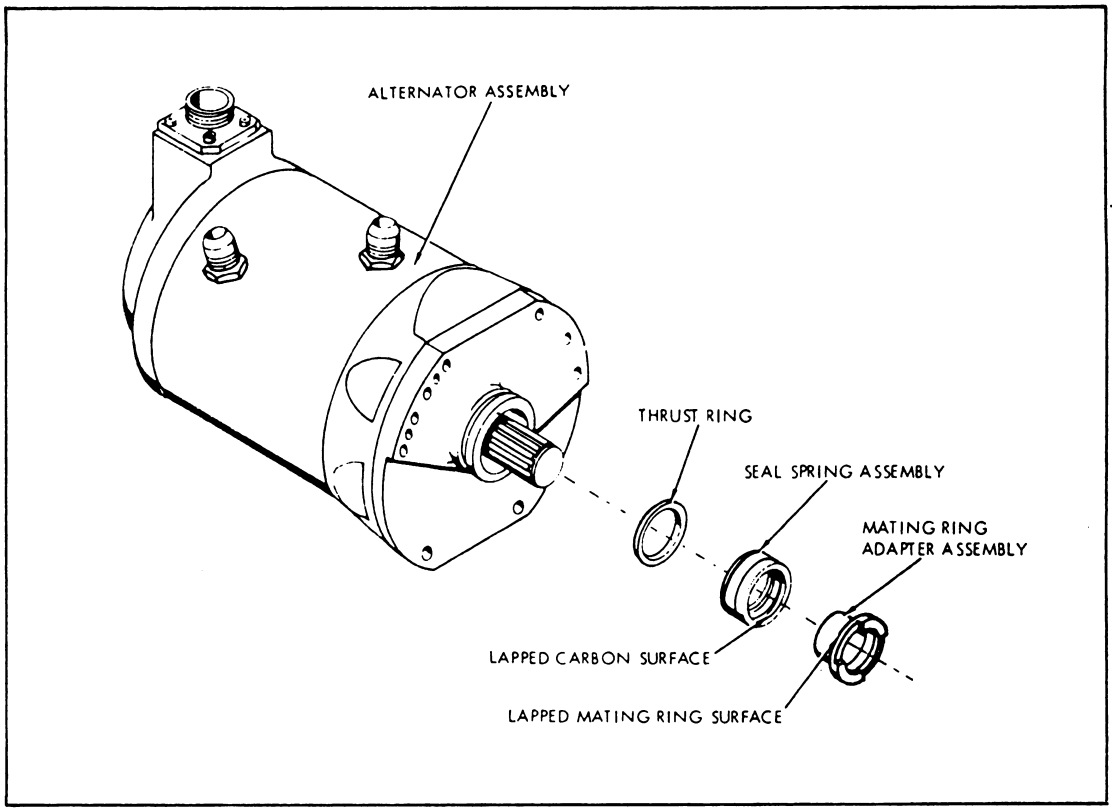

Figure 3-18.—Alternator sealol seal assembly; exploded view.

junction box assembly, alternator, fuel pump valve, and fuel pump. Then you will conduct continuity test on the afterbody\tailcone group cable assembly and junction box, FIR test the alternator, and test the fuel pump using a fuel pump test stand (fig. 3-17).

Before the alternator is FIR tested, the alternator sealol seal assembly (fig. 3-18) must be turned around or lubricated and the torques verified.

If the alternator has been run, the alternator sealol seal assembly must be removed and discarded; a new seal assembly must be installed and tested. Removal of the seal assembly must be reported on a Torpedo Management Information System (TMIS) Torpedo Maintenance Data Form (NAVSEA 8510/5). The serial numbers of the alternator and the new sealol seal assembly must be entered in the report. Entries stating that the seal assembly was removed and discarded must be made on the component history cards of the alternator and alternator sealol seal assembly. The sealol seal assembly component history card should be forwarded with the Torpedo Maintenance Data Form. The serial number of the replacement seal must be entered on a new component history card for the alternator. If the alternator has not been run, the sealol seal assembly is not removed.

Lubricating the seal and checking the torque of the seal and rotor shaft are the only maintenance you are required to perform before FIR testing the alternator.

After FIR testing the alternator using the Mk 541 test set, remove and test the relief valve (fig. 3-16). Then, perform a vacuum leak test on the alternator and reinstall the relief valve.

While you have the components removed from the afterbody\tailcone group, the velocity sensor switch (located inboard of the top damping vane,

Digitized by Google

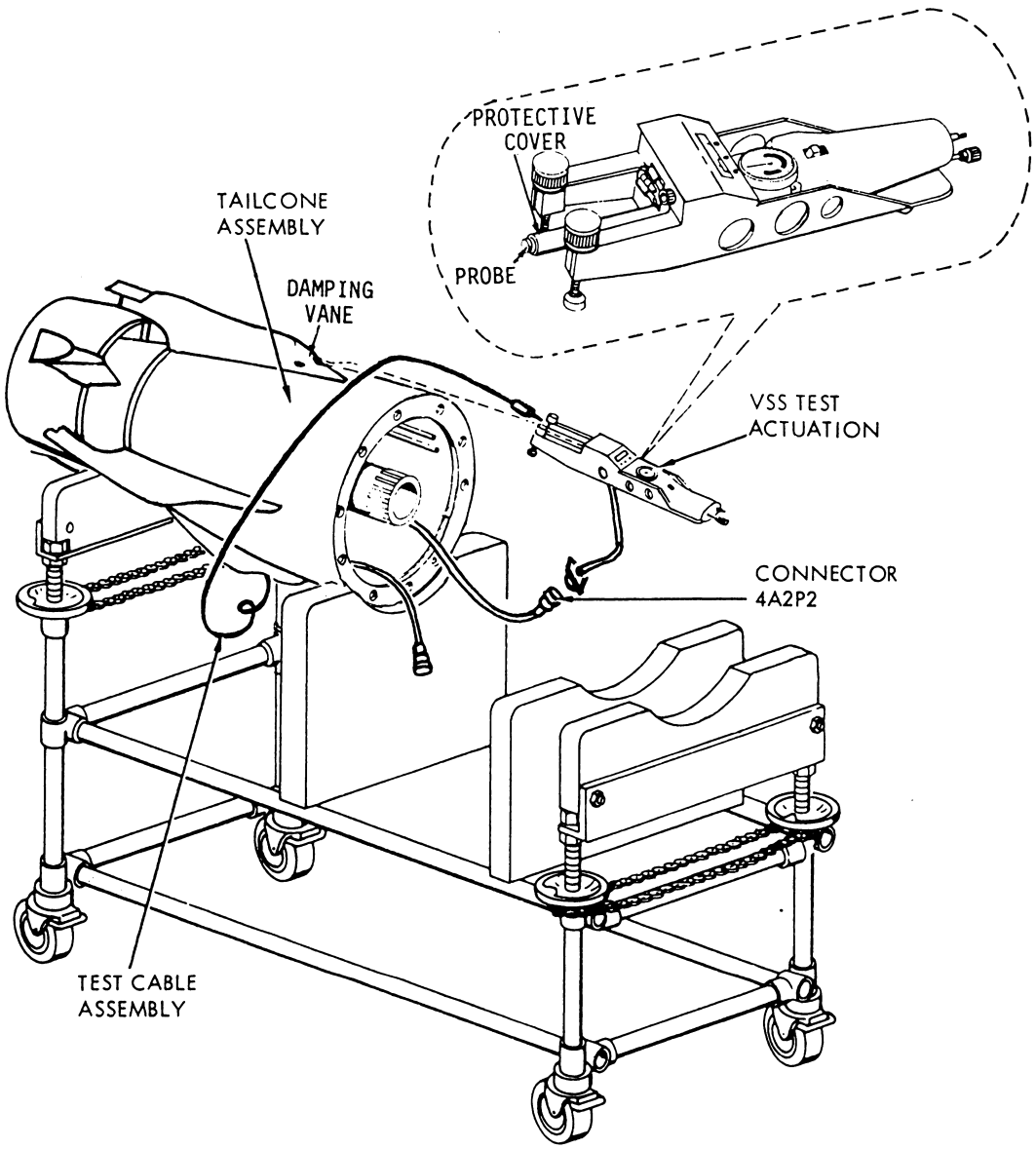

Figure 3-19.—Velocity sensor switch test.

figure 3-19) must be operationally tested with the test actuator to ensure that an unlock signal is transmitted to the unlock circuitry in the warhead exploder. This signal will permit exploder arming.

After the accessories and cables have been satisfactorily tested, the junction box assembly, alternator, fuel pump valve, and fuel pump must be reinstalled in the afterbody\tailcone. The hydraulic system must be drained, evacuated, and filled with hydraulic fluid (fig. 3-20). The engine crankcase must be filled with lube oil (fig. 3-21) and the chamber and valve assembly must be installed.

The chamber and valve assembly contains a Class C electroexplosive device (EED) and must be handled as directed by applicable technical manuals and local safety instructions. Safety glasses, grounded wrist stat, and flame-resistant clothing must be worn by personnel handling the assembly.

A new or refurbished chamber and valve assembly is required for every torpedo during

Digitized by Google

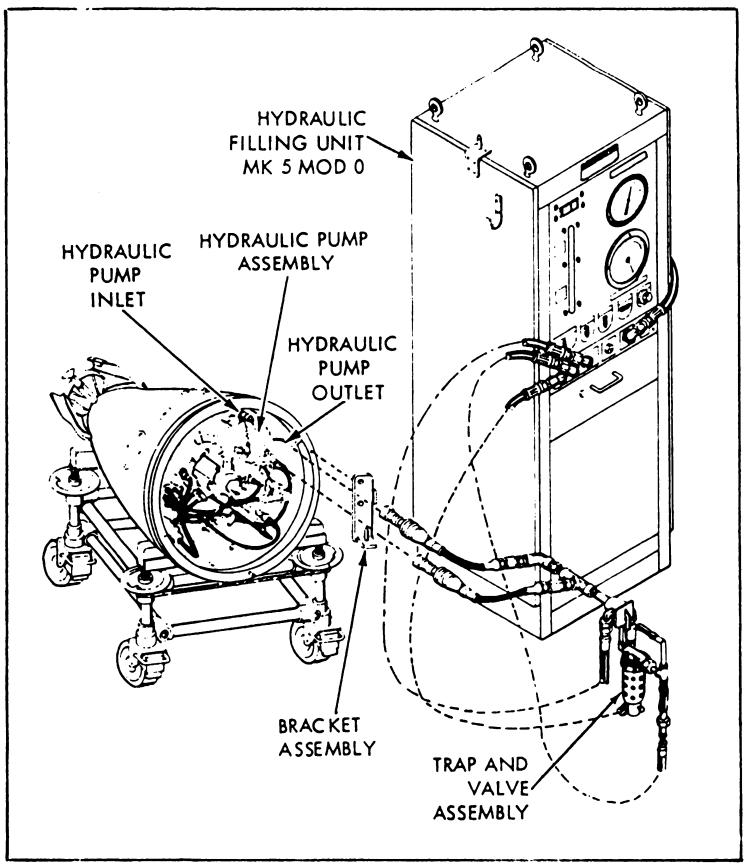

Figure 3-20.—Hydraulic system; drain, evacuate, and fill.

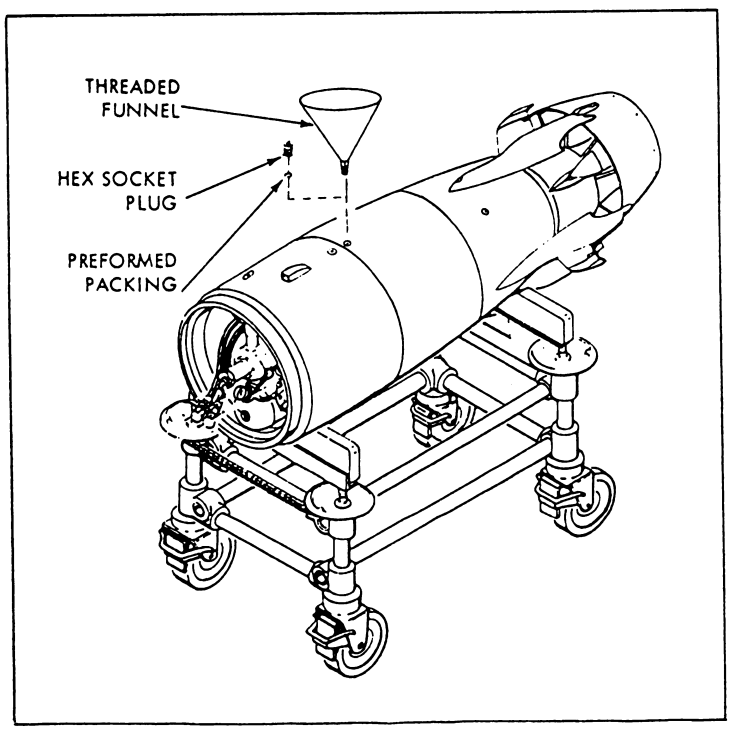

Figure 3-21.—Engine oil; fill.

Digitized by Google

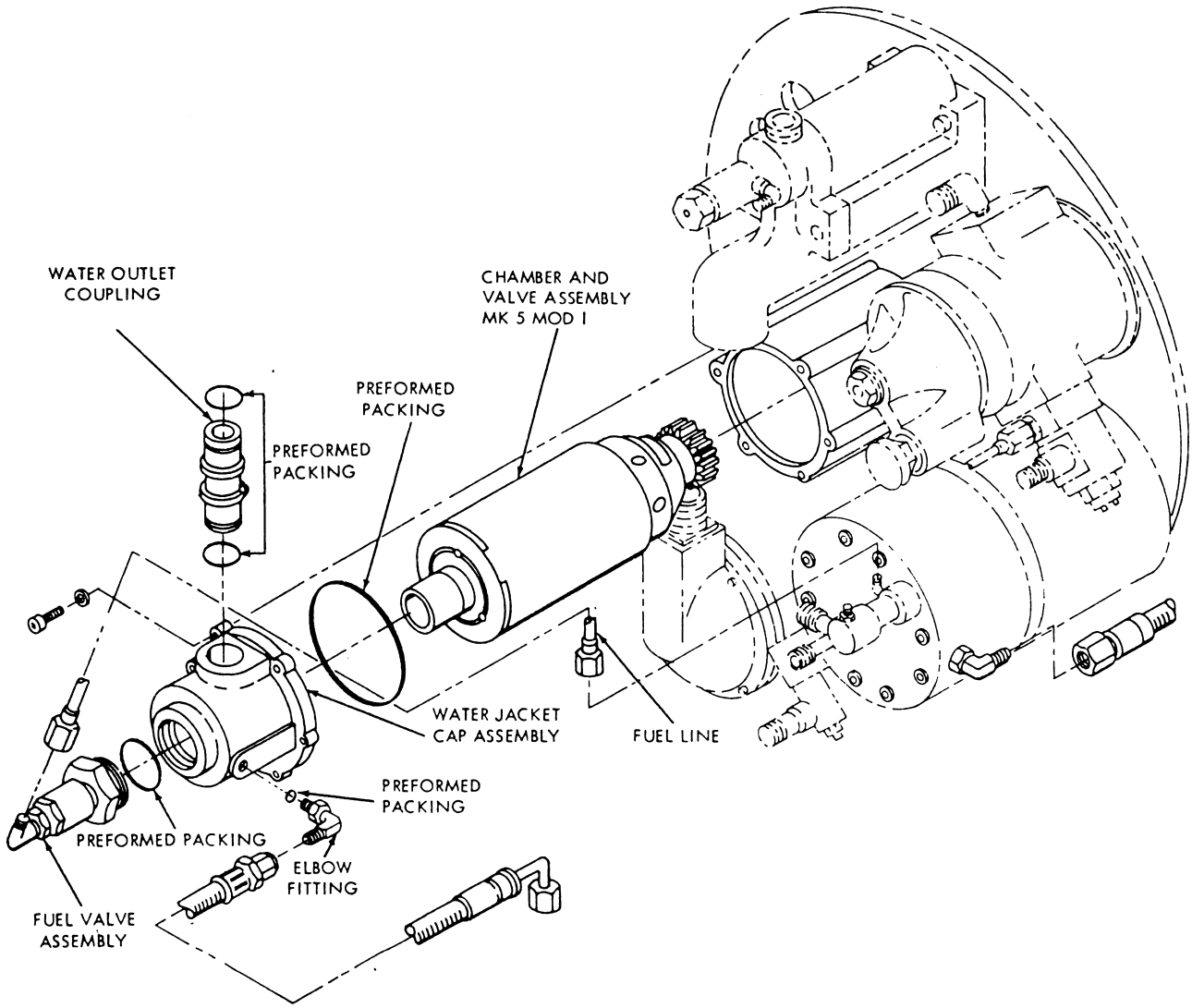

Figure 3-22.—Chamber and valve assembly installation.

warshot preparation. To install the assembly, remove the fuel valve and water jacket cap (fig. 3-22). During reassembly, install new packings.

When the fuel valve, water jacket cap, and chamber and valve assembly are drawn from stock, the information on the component history cards must be inspected for correctness, and all serial numbers must be verified. The components must be checked for contamination and for shipping and handling damage.

After installation of the chamber and valve assembly, an operational test of the afterbody\tailcone group must be conducted. Figure 3-23 shows the accessory connections for the test. The operational test involves rotation of the engine to open and close valves in the forward afterbody compartment. While the engine is rotating, operation of the coolant pump inlet valve, water intake valve, fuel pump valve, and hydraulic pressure must be observed. Flush-pin gauge assemblies are used to monitor the operation of the coolant pump and water inlet valves (fig. 3-23). Valve operation is indicated by the gauge pin protruding from the adjustable bushing on the gauge assembly (fig. 3-24). The hydraulic pressure line slide valve, provides the hydraulic pressure to open the fuel pump valve, is operated by 24-volt dc from the afterbody test set. Operation of the fuel pump valve

Digitized by Google

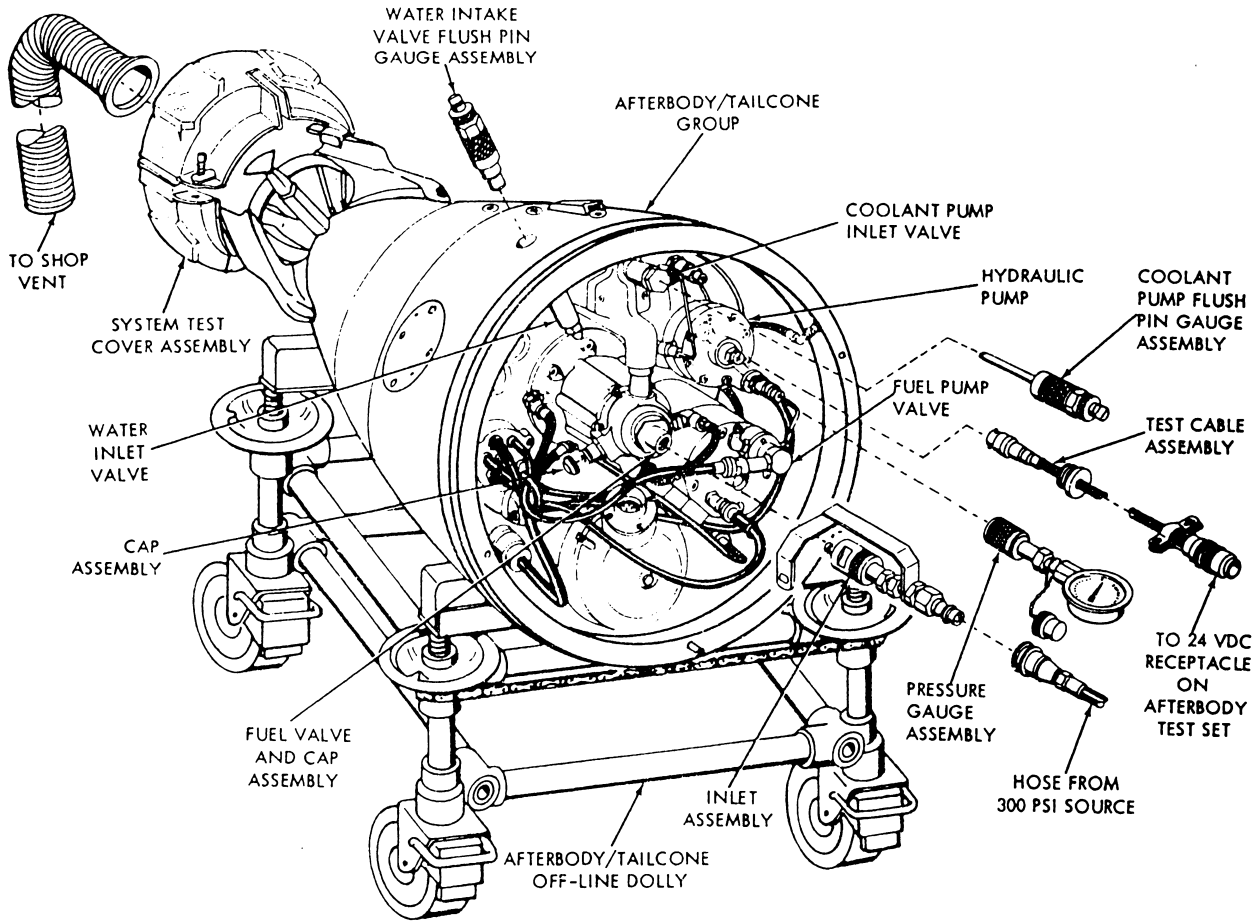

Figure 3-23.—Afterbody/tailcone accessory connections for operational test.

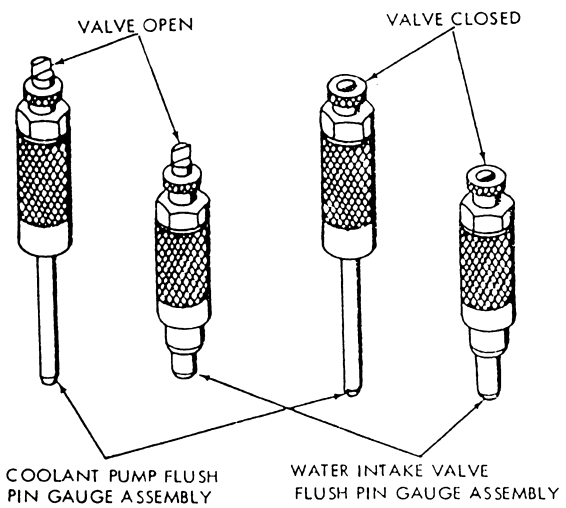

Figure 3-24.—Flush pin gauge assemblies.

spring can be observed through a hole in top of the fuel pump valve.

An accessory vacuum leak test and a continuity test of the igniter are also part of the group operational test. After the operational tests are completed, a back pressure test is conducted to check the water intake valve for leakage, and dummy transducers are installed in place of the fuel and hydraulic pressure transducers shown in figure 3-16.

Initial Torpedo Assembly and System Tests

Now we are ready to start putting all of these groups together and testing them as one unit.

During the initial assembly of the torpedo, the group cables are inspected and connected; the command wire guide tube is inserted in the

Digitized by Google

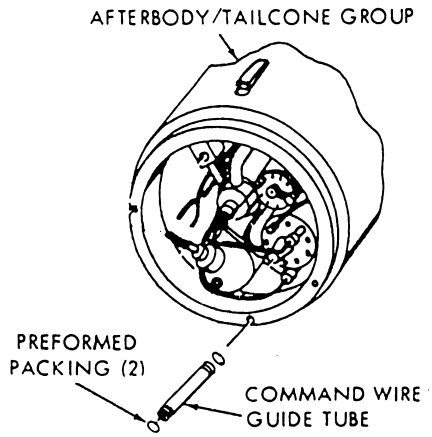

Figure 3-25.—Command wire guide tube installation in the afterbody/tailcone group.

afterbody\tailcone (fig. 3-25); and the command wire is fed from the fuel tank through the guide tube until the wire extends approximately 2 feet beyond the fairlead. You may find this takes some practice to do. The command wire is then fed through the hole in the bottom half of the system test cover assembly.

After you have cabled the various groups together and the test connections are made between the Mk 541 test set and the torpedo (fig. 3-26), the torpedo is system tested. During the system test, the warhead group and afterbody\tailcone group must be grounded to an ordnance ground except when otherwise instructed by the job sheet.

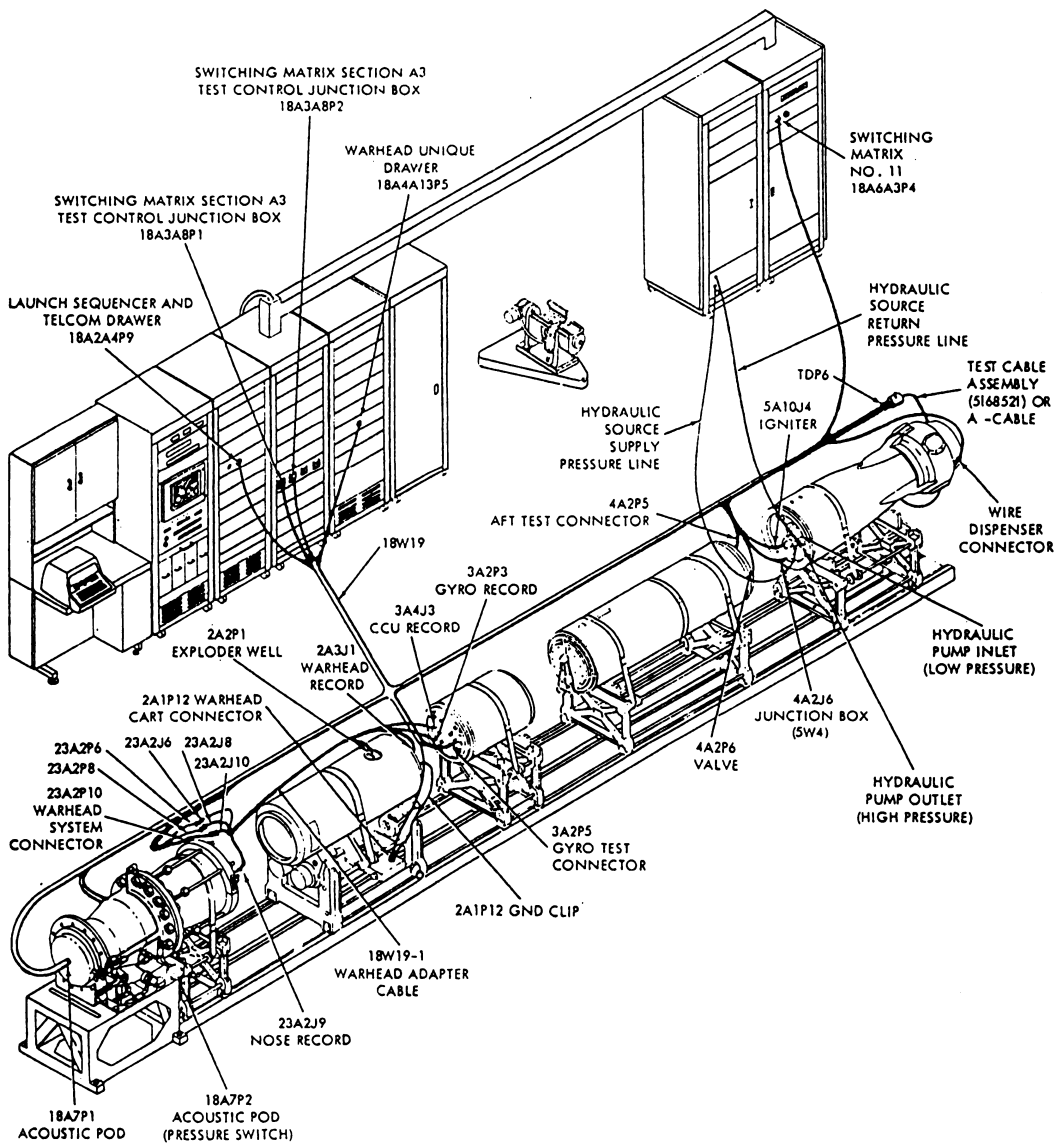

Figure 3-26.—Test connections for warshot torpedo system test.

Digitized by Google

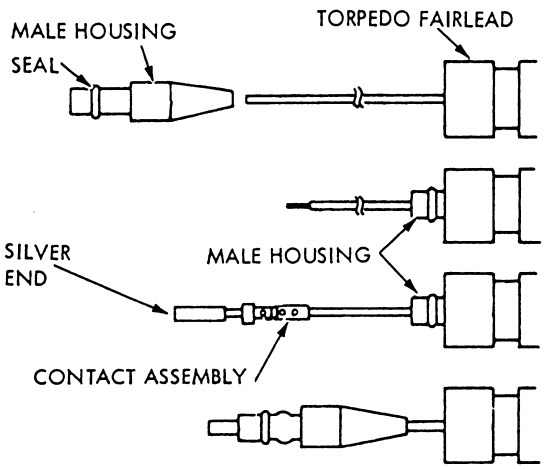

Figure 3-27.—Wire splice.

You must strictly follow the job sheet for doing the system test because deviations could result in costly equipment damage. The test set operator must understand that if a required indication or action does not occur, or is not understood, the supervisor must be contacted for instructions before proceeding with the test. Any irregularity must be immediately reported.

After you start a test program, it may be interrupted only under the following conditions:

1. If continued test set operation will result in injury to personnel
2. If continued test set operation will result in damage to equipment
3. If the job sheet or the test set teleprinter specifically provides for an interruption

Final Torpedo Assembly

We are now ready for the final stage prior to shipping the weapon out.

When the system test has been satisfactorily completed, the torpedo hydraulic system must be drained, evacuated, and filled. The torpedo groups are then assembled together and the torpedo is vacuum leak tested and backfilled with nitrogen. A male housing is installed on the command wire and a contact assembly (for connecting the command wire to the TMD is spliced to the command wire [fig. 3-27]). The fuel pump must be primed with a minimum of 3-1/2 ounces of Otto Fuel II. The priming fixture (fig. 3-28) must be filled in the fueling area. Only those personnel that are qualified to handle Otto Fuel II and are familiar with the contents of the

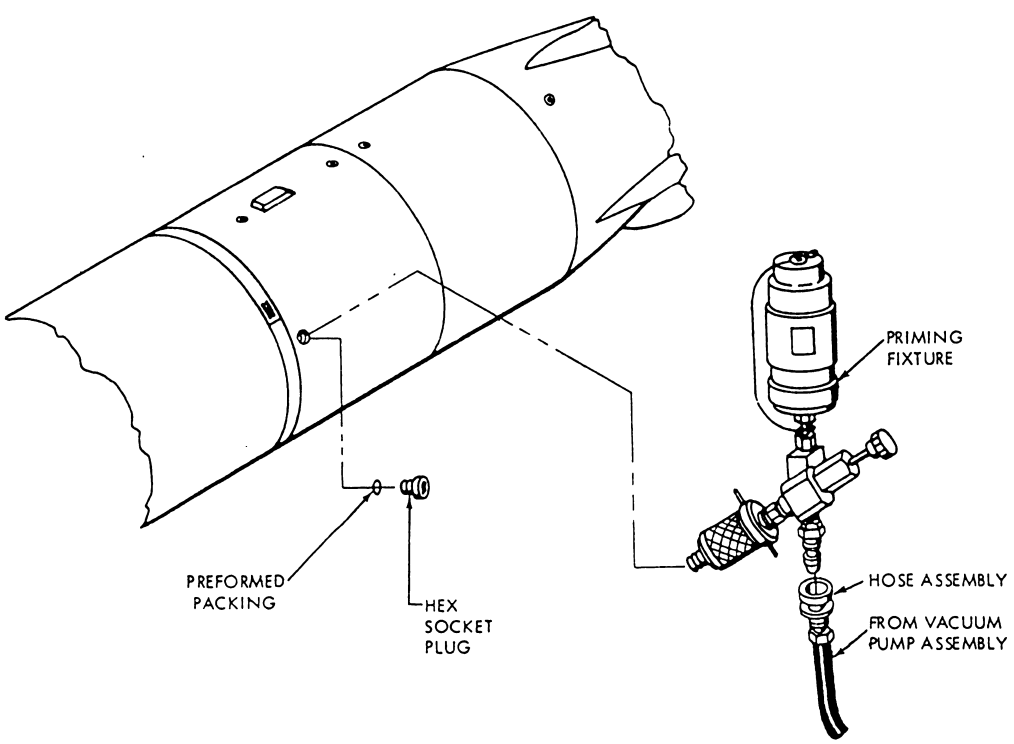

Figure 3-28.—Fuel pump priming.

Digitized by Google

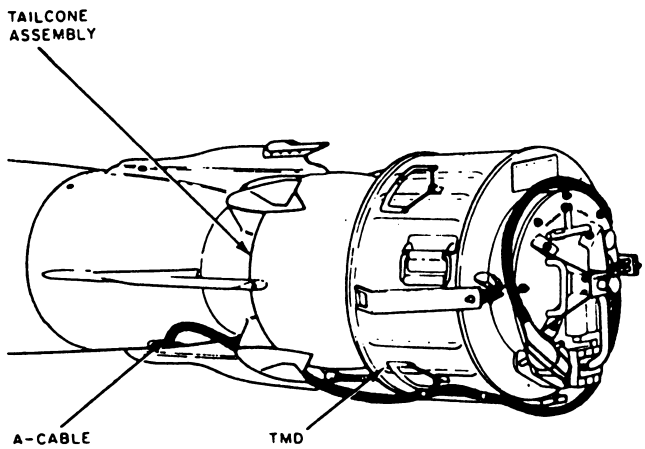

Figure 3-29.—Torpedo mounted dispenser (TMD) attached to a Mk 48 torpedo.

applicable technical manuals concerning OTTO Fuel II should be tasked with priming the fuel pump.

After you have primed the fuel pump, you must take the following actions:

1. The amount of fuel used to prime the fuel pump must be recorded on the QA sheet.
2. A sticker labeled PRIMED must be placed alongside the vacuum port.
3. A tested exploder and arming device must be installed in the warhead group.
4. A TMD must be mounted on the torpedo (fig. 3-29).
5. A readiness inspection must be conducted on the torpedo. If there are no deficiencies, the torpedo is ready for issue.

In chapter 5 we will discuss the maintenance requirements for some of the various test equipment required to support the maintenance and testing of the Mk 48 and the Mk 48 ADCAP. Therefore, our next set of topics will only cover the responsibilities, philosophy, and guidance concerning the maintenance of the associated support equipment.

WSE/ISSE Maintenance

The workshop support equipment and in-service support equipment (WSE/ISSE) installed at each IMA encompasses equipment that you will be required to test, disassemble, service, assemble, and calibrate. It is comprised of special-purpose test equipment, workshop tools, workshop handling equipment, and weapons handling equipment. Detailed descriptions, procedures, and data pertaining to the operation and maintenance of WSE/ISSE at IMAs are contained in the technical manuals listed in section 9 of NAVSEA OD 45814.

Within the scope of IMA provisioning and technical documentation, maintenance of the Mk 48 torpedo WSE installed at each IMA is the responsibility of shop personnel. However, during repairs of the Mk 48 WSE, the practice of interchanging components between test and measuring equipment to aid in troubleshooting and fault isolation is not encouraged and is only allowed if specifically authorized by local command instructions.

For the Mk 48 ADCAP torpedo ISSE installed at each IMA, the responsibility belongs to the shop and the contractor until it is totally transitioned to Navy support.

Calibration Support

WSE/ISSE and WSE/ISSE subassemblies requiring periodic calibration, testing, and servicing have been integrated into the Navy's calibration program at each IMA. A listing of Mk 48 and Mk 48 ADCAP torpedo WSE/ISSE calibration requirements is contained in FCA *Metrology Requirements List*, NAVSEA OD 45854. This publication contains information on

Table 3-2.—FCA Code Assignments

ACTIVITY	CODE
SUBASE, Pearl Harbor (Code 090)	LYQ
NAVSUBSUPPFAC, New London (Code 800)	NWQ
SUBASE, San Diego (Code 03)	ZDQ
NUWES, Keyport (Code 502)	KEQ
SUBTORPFAC, Charleston	CLQ
SUBTORPFAC, Yorktown	YWQ
SERVSCOLCOM, Orlando (23C)	ODQ

Digitized by Google

calibration standards and test instruments required at IMAs. It also identifies specific WSE/ISSE authorized for calibration by IMA personnel/calibration laboratories. Each IMA has been designated as a field calibration activity (FCA) Phase H-4 facility and is assigned a three-letter FCA code. Table 3-2 identifies the FCA code assignment for each IMA. All test, measuring, and diagnostic equipment shall be labeled by the local FCA in accordance with NAVELEXINST 4355.2 to identify calibration status. Calibration intervals are also listed in FCA *Metrology Requirements List*, NAVSEA OD 45854. FCA Phase H-4 facilities (IMAs) shall participate in the Naval Sea Systems Command Calibration Management Information System (SEACALMIS) program, as defined in NAVSEA-INST 4855.11.

CONTAINER MAINTENANCE

The repair of containers is covered by *Ordnance Requirement*, OR-99, and consists of replacement of mechanical parts and those repairs falling within the capabilities of the activity. Descriptions of containers used for the torpedo and torpedo components are presented in OP 4027 for the Mk 48 torpedo and in ST890-AY-PRO-010 for the Mk 48 ADCAP torpedo. Replacement parts for container maintenance are listed in the appropriate COSAL document. Repairs that are beyond IMA capabilities will be accomplished at Navy Depot Repair Facilities: NUWES Keyport, NWS Charleston, and NWS Yoktown.

SPECIAL TOOLS

Special tools required as a result of technical manual job sheet changes will be supported by the Navy supply system for the Mk 48 torpedo. NUSC will provide special tooling support for the Mk 48 ADCAP torpedo until the Mk 48 ADCAP support completes transition to the Navy supply system.

MK 48 TORPEDO DEPOT LEVEL MAINTENANCE

Mk 48 torpedo depot level maintenance support is provided by the Navy. A Navy-operated depot level maintenance facility has been established at NUWES, Keyport. Depots for maintenance of the TMD, Mk 10-0 are located at NWS Charleston; NUWES Keyport; SUBASE Pearl Harbor; SUBASE New London; and SUBASE San Diego.

Mk 48 Torpedo Deployed Shelf Life Evaluation (DSLE) Program

During fleet operations, certain heavyweight warshot torpedoes will be selected to be part of the Mk 48 Torpedo Deployed Shelf Life Evaluation (DSLE) Program for disassembly, testing, and inspection to a greater degree than that required for normal warshot verification. The purpose of this action is to allow reliability, maintainability, shelf life, and quality aspects of production to be more closely examined and to be recorded. Torpedoes selected for extensive verification are designated by Ship's Parts Control Center (SPCC).

Mk 48 Torpedo Warshot Depot Maintenance (WDM) Program

The WDM program will assure that the reliability and asset readiness posture of Mk 48 torpedoes is maintained by performing periodic depot maintenance. This periodic depot maintenance will refurbish weapons as close to factory new condition as possible and incorporate design improvements. Torpedoes received from the fleet will be complete all-up warshots, which will be processed through the WDM processes and reissued as Mod 1 or Mod 4 torpedoes. Approximately 240 fleet torpedoes will be cycled through NUWES depot each year to receive maintenance upgrade processes and ORDALTing to the approved WDM program baselines. Returned torpedoes shall meet the following criteria. The oldest REBIT **(Reliability Enhanced Baseline Improved Torpedo)** warshot exercise torpedoes that have reached their limit, 10-15 in-water runs, are to be shipped first. Due to funding constraints, IMAs will use a 4-to-1 ratio (warshot to exercise [Fired]) when making shipments to NUWES. All shipments are controlled by SPCC and if a situation arises when an IMA cannot meet this criteria, the IMA shall request guidance from SPCC (Code 8533). Torpedoes will be returned in an all-up warshot configuration. IMA will identify and attach a completed copy of the form illustrated in

Digitized by Google

REGISTER NO.	YES	NO	UNKNOWN
WARSHOT NEVER ISSUED FROM IMA			
WARSHOT ISSUED TO TENDERS/SHOREBASE			
ISSUED TO SUBMARINE AS WARSHOT			
• WAS TORPEDO TUBE LOADED			
ISSUED AS EXERCISE TORPEDO			
STATUS OF PREVIOUS EXERCISE TORPEDO			
• EXERCISE TO WARSHOT TURNAROUND COMPLETED PER OP _____			
• AB/TC TURNAROUND COMPLETED PER OP _____ NO FURTHER TESTING BEFORE SHIPPING			

• KNOWN DEFECTIVE COMPONENTS (LIST)

•

•

•

•

Figure 3-30.—Torpedo history since REBIT configured.

figure 3-30 for each torpedo being returned to NUWES for the WDM program. IMAs are restricted from any form of cannibalization of components; however, they may exchange defective depot level repair (DLR) components for RFI material in WDM returned weapons, but they must annotate it on the component history card and complete a green quality assurance tag. A WDM program flow chart is provided as figure 3-31.

Return of Damaged Torpedoes

IMAs must not ship torpedoes that have sustained major damage due to handling accidents or internal salt-water flooding as WDM return weapons. When a torpedo sustains major damage, place it in condition code F. Enter it in the Down Torpedo Reporting System (see section 5 of NAVSEA OD 45814) as requiring depot repair, and request disposition from SPCC (Code 8533) by message. This information should be sent to Commander Naval Sea Systems Command (COMNAVSEASYSCOM), within 24 hours of discovery of the damage.

Mk 88 Exercise Head Depot Refurbishment Program

The NUSC Mk 88 exercise head (Torpedo Instrumentation and Exercise Section [TIES])

Digitized by Google

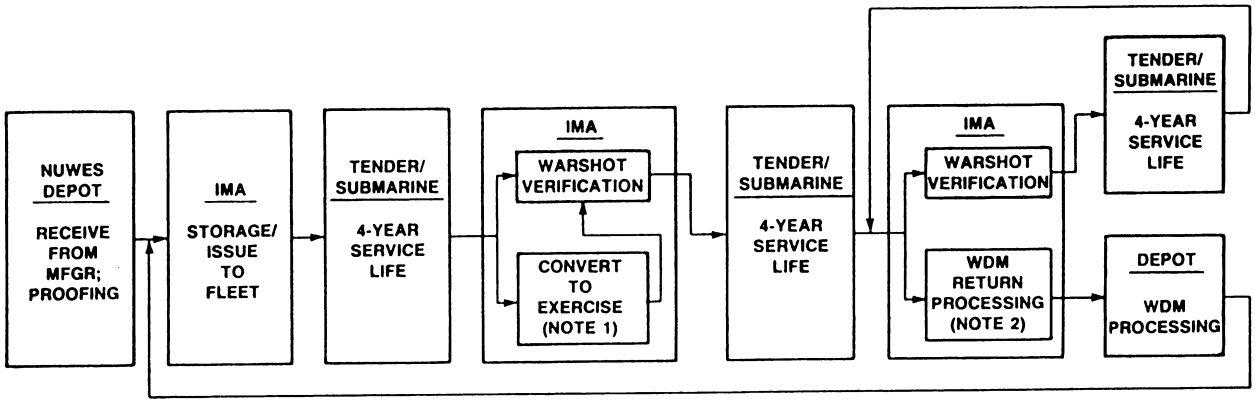

NOTES:

1. Randomly selected fleet return warshots are converted to exercise weapons by IMAs. Exercise torpedoes may make up to 10 in-water runs before conversion back to warshots. Torpedoes must receive WDM processing before they can again be used for exercise. See OP 4024 Volume 1 Chapter 2 REBIT/WDM philosophy.

2. WDM return weapons selected by IMAs per the WDM program plan. Shipment controlled by SPCC (Code 8533).

Figure 3-31.—Mk 48 torpedo WDM flow chart.

Refurbishment Program Plan describes the flow of 40 TIES per year through the NUWES depot for refurbishment. Fleet IMAs will ship TIES as SPCC (Code 8533) directs.

Under this program, fleet IMAs may not cannibalize TIES being returned for refurbishment. Returned exercise heads must contain all their parts and components. Failed DLR components may be installed in TIES units being returned to the depot, provided that TMIS forms are submitted to document the known defective material, and the TIES component history cards are annotated to show the existence of the defective parts. Additionally the inclusion of known defective material is indicated on the green quality assurance (DD 1577-2) tags attached to the TIES and their containers.

TORPEDO MK 48 TORPEDO ADCAP DEPOT MAINTENANCE

The Mk 48 ADCAP torpedo depot level maintenance support is provided by WECO, HAC, and the Navy. Components and equipment common to both the Mk 48 and Mk 48 ADCAP torpedoes are supported by the Navy using existing support procedures in place for the Mk 48. The primary contractor depot is located at WECO, Cleveland, Ohio.

The Navy Depot for the Mk 48 ADCAP torpedo is designated at NUWES, Keyport, Wash.

Depot level maintenance and repair support of the following ISSE is accomplished by the contractor until transition is completed:

1. System Test Set, Mk 660, Mod 0
2. Fleet Data Reduction System, Mk 23, Mod 0
3. Calibration Console, Mk 125, Mod 0
4. Fuel Delivery Assembly Test Set, Mk 658, Mod 0
5. Steering Assembly Test Set, Mk 659, Mod 0

The contractor will also be responsible for the following interim support equipment:

1. Guidance and Control (G & C) Test Set
2. Instrumentation/Exercise and Warhead Subsystem Test Set
3. EESTS Test Set

RECORDS AND REPORTS

Records are required to be maintained in order that a complete history of significant events occurring during the life cycle of each heavyweight torpedo may be recorded. Secondly, these recording serve to maintain accountability of the major serialized components comprising the

Digitized by Google

TORPEDO MANAGEMENT INFORMATION SYSTEM
TORPEDO MAINTENANCE DATA FORM
(NAVSEA FORM 8510/5)

2. DOCUMENT NO.		
UNIT ID CODE (UIC)	ACTION JULIAN DATE	ACTION SEQ NO.

SECTION I — IDENTIFICATION

1. ACTIVITY/SHIP NAME/HULL NUMBER

SECTION II — DESCRIPTION

3. REPORT TYPE	4. EQUIPMENT REPORTED ON	5. TYPE OF ACTION	6. DEFICIENCY FOUND DURING	
			WEAPON/VEHICLE	TEST EQUIPMENT
(1) ☐ MAINTENANCE (2) ☐ DEFICIENCY (3) ☐ ORDALT/CHANGE (4) ☐ LOGISTIC (5) ☐ RUDTORPE (6) ☐ OTHER (SPECIFY)	(1) ☐ WEAPON/VEHICLE (2) ☐ TEST/SUPPORT EQUIPMENT (3) ☐ DOCUMENTATION/ PROCEDURES (4) ☐ SPARES (5) ☐ OTHER (SPECIFY)	(1) ☐ WARSHOT TURNAROUND/VERIFICATION (2) ☐ PREPARATION/CONVERSION (3) ☐ SPECIAL RETURN ACTIONS Mk 46 ONLY CLASS "A" ☐ "B" ☐ (4) ☐ EXERCISE (POST FIRING) TURNAROUND IF EXERCISE TURNAROUND ACTION, ENTER FIRING DATA BELOW UIC / JULIAN	(1) ☐ RECEIPT/DAMAGE INSPECTION (2) ☐ DISASSEMBLY INSPECTION (3) ☐ COMPONENT TURNAROUND (4) ☐ COMPONENT/FIR TEST (5) ☐ INITIAL ASSEMBLY (6) ☐ SYSTEM TEST (7) ☐ FINAL ASSEMBLY (8) ☐ RUN ANALYSIS (9) ☐ OTHER (SPECIFY)	(1) ☐ CALIBRATION (2) ☐ WEAPON/VEHICLE TEST (3) ☐ SELF TEST (4) ☐ VISUAL INSPECTION (5) ☐ FIR TEST (6) ☐ OTHER (SPECIFY)

7. WEAPON/VEHICLE/EQUIPMENT I.D.	MK	MOD	REGISTER/SERIAL NO.	8. RUN NUMBER	S/R	9. TORPEDO NALC		10. MOD	11. NEXT SCHEDULED MAINTENANCE
						INCOMING	OUTGOING		CLASS "A" ☐ "B" ☐ DSLE ☐

12. TEST EQUIP. ☐ USED ☐ DEFICIENT	MK	MOD	SER. NO.	S/R	13. TEST DOC/PROCEDURE ☐ USED ☐DEFICIENT	VOL	REV	CHANGE	PARA/STEP

SECTION III — MATERIAL IDENTIFICATION/ACTION

14. ASSY/FIR ITEM/PART	DRAWING NUMBER AND REVISION	REFERENCE DESIGNATOR	SERIAL NUMBER	REPLACEMENT SERIAL NUMBER	15. ORDALT/CHANGE NO.	16. R/I	17. S/R	18. P/D	19. S/CL/TABLE	TEST TAPE AND REV.	20. FILE CODES TEST STEP	BLOCK

21. NARRATIVE (1) DESCRIPTION (2) SHOP ACTION (3) RECOMMENDATIONS

22. REC'D FROM (UIC)

SHIP TO (UIC)

23. MANHOUR/MATERIAL EXPENDITURES		24. REFERENCES/ENCLOSURES
MAN/HOURS	MATERIAL COST	
		25. NAME OF ORIGINATOR — SUBMITTED DATE (JULIAN)

Figure 3-32.—Torpedo Maintenance Data Form, NAVSEA Form 8510/5.

Digitized by Google

weapon. Effective reports are necessary to enable the distribution of essential maintenance, deficiency, and operational performance data to cognizant activities for further engineering analysis. Recognition and resolution of existing or potential torpedo deficiencies are thereby facilitated and torpedo readiness and capability improved. Feedback information resulting from analysis of the reports will be provided to maintenance activities and to contractor repair facilities, subsequently enhancing overall logistic support of the weapon system.

Reporting deficiencies and maintaining serialized accountability of major serialized components of the heavyweight torpedo weapon system is accomplished using a single reporting system: The Heavyweight Torpedo Technical Data System (HTTDS).

TORPEDO MANAGEMENT INFORMATION SYSTEM (TMIS)

The Torpedo Maintenance Data Form, NAVSEA Form 8510/5, (fig. 3-32) will be used by organizational level maintenance activities in accordance with TW510-AA-PRO-020 to report corrective maintenance performed on the Mk 48 and Mk 48 ADCAP torpedo hardware. This form will also be used as an informal communication vehicle (RUDTORPE) for reporting type deficiencies, comments, and recommendations.

The IMAs, RFI activities, and depots will use the following forms and manuals to report on the heavyweight torpedo Mk 48/Mk 48 ADCAP:

Torpedo	Form	Manual
Mk 48	8510/5 (fig. 3-32)	TW510-AA-PRO-030
Mk 48 ADCAP	8510/X (fig. 3-33)	TW510-AA-PRO-040

Reporting

The following situations will be reported:

1. Failures and deficiencies identified in the torpedo, torpedo spares, and test equipment.
2. ORDALT accomplishment and verification of torpedo components and test equipment.
3. Maintenance actions as prescribed in the TMIS manual.
4. Comments, reports, and recommendations of a RUDTORPE nature.
5. Additional information as specified in TW510-AA-PRO-030 and TW510-AA-PRO-040.

Organizational Maintenance Level

NAVSEA Form 8510/5 will be completed in accordance with NAVSEA Technical Document TW510-AA-PRO-020, and will be used by submarine personnel to report the following basic types of data:

- Corrective maintenance performed on Mk 48/Mk 48 ADCAP torpedo, associated tools, and handling equipment.
- Deficiency reports completed during incoming inspection (or "Receipt and Damage" inspection), handling operations, and/or preparations for firing. Additionally, deficiencies that are discovered that preclude the employment of a weapon and/or result in an unscheduled off-load.
- RUDTORPE Report is used when providing or requesting information relative to procedures, documentation, disposition, and support problems relating to weapon maintenance, handling, or use.

RUDTORPE-type reports are intended to be an informal communication vehicle between maintenance activities and cognizant government support agencies from which appropriate remedial action will be effected. These reports are required to promote an awareness and resolution of any deficiencies that may detract from fleet readiness. RUDTORPE reports will be submitted under the following occasions:

1. When receipting for deficient weapons from an IMA.

2. When recommending improvement to the design, performance, and reliability of the torpedo and its associated support equipment.

3. When recommending improvements to equipment and personnel safety, maintenance and handling procedures, test requirements, equipment/material preservation, and hardware packaging.

4. When highlighting supply support problems.

5. When recommending proposed changes and improvement of weapon system publications.

6. When requesting authority to accomplish a survey of unsatisfactory, defective, or obsolete torpedoes and weapon system components;

Digitized by Google

TORPEDO MANAGEMENT INFORMATION SYSTEM
NAVSEA FORM 8510/X

MK 48/ADCAP TORPEDO

MARK 48
ADCAP

1 EQUIPMENT REPORTED ON (CIRCLE ONE)
1 TORPEDO
2 TEST/SUPPORT EQUIPMENT
3 DOCUMENTATION/ PROCEDURES
4 SPARES

2 ACTION TYPE (CIRCLE ONE)
1 MAINTENANCE
2 DEFICIENCY
3 ALTERATION
4 REPAIR
5 RUDTORPE
6 INFORMATION
7 OVERHAUL
8 DEVIATION/ WAIVER

DOCUMENT NUMBER
3A UNIT ID CODE (UIC) | 3B YR | 3C ACTION SEQ NO

4 ACTION/REPAIR START DATE — MM DD YY
5 CLOSED/REPAIR COMPLETE DATE — MM DD YY
6 PROGRAM (2-DIGIT CODE)

7 FAILURE CONFIRMATION (CIRCLE ONE)
1 FALSE REJECT
2 CONFIRMED
3 UNCONFIRMED
4 UNRELATED FAILURE

8 ORIGINATOR (NAME) CODE

9 CLOSED BY (NAME) CODE

10 TYPE OF TORPEDO TURNAROUND (CIRCLE ONE)
1 WARSHOT TRUNAROUND/VER/PREP
2 CONVERSION: WARSHOT TO EXERCISE
3 CONVERSION: EXERCISE TO WARSHOT
4 EXERCISE TURNAROUND/PREPARATION

DEFICIENCY FOUND DURING (CIRCLE ONE)

11A TORPEDO
1 RECEIPT/DAMAGE INSPECTION
2 DISASSEMBLY INSPECTION
3 COMPONENT TURNAROUND
4 COMPONENT/FIR TEST
5 INITIAL ASSEMBLY
6 SYSTEM TEST
7 FINAL ASSEMBLY
8 RUN ANALYSIS
9 OTHER (SPECIFY IN BLOCK 25)

12A REG	12B RUN	12C NALC	13A TEST DOCUMENT/PROCEDURE	13B REV	13C CHANGE	13D JS/CL/TABLE	13E PARA/STEP

14A TEST EQUIPMENT	14B SERIAL NO	14C MK	14D MOD	14E PART NUMBER	15 SOFTWARE VERSION

DIAGNOSTIC DATA				FAILURE DATA			
16A FUNCTION	16B BLK	16C TEST	16D STEP	17A UPPER LIMIT	17B LOWER LIMIT	17C UNITS	17D MEASURED VALUE

18A NOMENCLATURE	18B INITIAL PART NUMBER	18C REF DES/COMP DES	18D SERIAL	19 R/I	20 CC	21 MAL
22A ALTERATION / 22B V/A	22C FINAL PART NUMBER	23 DEVIATION/WAIVER	24 STATUS			
1 NOMEN	INITIAL P/N	REFDES-COMP DES	SERIAL	R/I	CC	MAL
1 ALT / V/A	FINAL P/N	DEVIATION/WAIVER	STATUS			
2 NOMEN	INITIAL P/N	REFDES-COMP DES	SERIAL	R/I	CC	MAL
2 ALT / V/A	FINAL P/N	DEVIATION/WAIVER	STATUS			
3 NOMEN	INITIAL P/N	REFDES-COMP DES	SERIAL	R/I	CC	MAL
3 ALT / V/A	FINAL P/N	DEVIATION/WAIVER	STATUS			
4 NOMEN	INITIAL P/N	REFDES-COMP DES	SERIAL	R/I	CC	MAL
4 ALT / V/A	FINAL P/N	DEVIATION/WAIVER	STATUS			

25 NARRATIVE DESCRIBE WHAT WAS DONE, WHY, RECOMMENDATIONS, AND FINAL DISPOSITION OF HARDWARE

26 REFERENCES

27 REFERENCE TMIS

Figure 3-33.—Torpedo Management Information System, NAVSEA Form 8510/X.

Digitized by Google

TORPEDO MANAGEMENT INFORMATION SYSTEM
NAVSEA FORM 8510/X
(Continued)

MK 48/ADCAP TORPEDO

3 DOCUMENT NO.

UIC	YR	SEQ NO

8 ORIGINATOR

18A NOMENCLATURE		18B INITIAL PART NUMBER	18C REF DES/COMP DES	18D SERIAL	19 R/I	20 CC	21 MAL
22A ALTERATION	22B V/A	22C FINAL PART NUMBER	23 DEVIATION/WAIVER	24 STATUS			
NOMEN		INITIAL P/N	REF DES/COMP DES	SERIAL	R/I	CC	MAL
1 ALT	V/A	FINAL P/N	DEVIATION/WAIVER	STATUS			
NOMEN		INITIAL P/N	REF DES/COMP DES	SERIAL	R/I	CC	MAL
2 ALT	V/A	FINAL P/N	DEVIATION/WAIVER	STATUS			
NOMEN		INITIAL P/N	REF DES/COMP DES	SERIAL	R/I	CC	MAL
3 ALT	V/A	FINAL P/N	DEVIATION/WAIVER	STATUS			
NOMEN		INITIAL P/N	REF DES/COMP DES	SERIAL	R/I	CC	MAL
4 ALT	V/A	FINAL P/N	DEVIATION/WAIVER	STATUS			

25 NARRATIVE DESCRIBE WHAT WAS DONE, WHY, RECOMMENDATIONS, AND FINAL DISPOSITION OF HARDWARE

Figure 3-33.—Torpedo Management Information System, NAVSEA Form 8510/X—Continued.

Digitized by Google

additionally, when requesting disposition instruction for these items.

- Corrective maintenance reports for the torpedo will be submitted for those actions occurring before application of warmup power with an intent to fire. After warmup power is applied (with intent to fire), COMSUBLANT and COMSUBPAC activities will report information required by message.

Classified data will not be submitted on the TMIS form. Classification of other submitted forms will be in accordance with Appendix A of NAVSEA OD 45814 and NAVORDINST 5511.35.

Organizational level activities will also provide copies of each report to other fleet commands in accordance with type commander's instructions. The organizational level reports pertaining to Mk 48 torpedo are also assigned a TMIS number and are included in the TMIS closed-loop feedback reporting system.

Intermediate Maintenance Level

IMA personnel will complete and submit a Torpedo Management Information System (TMIS) Report, in accordance with NAVSEA technical document TW510-AA-PRO-030 for the Mk 48 Torpedo, or technical document TW510-AA-PRO-040 for the Mk 48 ADCAP torpedo, intermediate level maintenance activity reporting instructions, for submarine fired weapons/vehicles. These instructions provide detail directions and procedures relating to entry of appropriate data in each block of the forms along with representative examples of the various types of reports required to be submitted.

NAVSEA Forms 8510/5 and 8510/X are tailored to Mk 48 torpedo requirements and should be completed as soon as possible after occurrence of the event to be reported, so that timeliness of the data will be maintained.

Whenever additional or corroborative data is obtained or discovered after submittal of a TMIS report, maintenance personnel will add/update data to the original TMIS and submit a copy of the updated TMIS to the HTTDS site representative. If the situation merits, a supplementary TMIS may be written that references the original.

SUMMARY

When performing maintenance on a heavyweight torpedo, safety must be an essential part of the planning. The heavyweight torpedo has three levels of maintenance: organizational, intermediate, and depot. At the organizational level, the submarine is responsible for minimal torpedo maintenance and RFI accountability. The intermediate level is where most of the maintenance will be performed. This will include extensive torpedo overhaul, workshop equipment repair, calibration support, container maintenance as well as maintenance of special tools. Depot level maintenance plays a large role in the maintenance of the warshot heavyweight torpedo. It is normally completed by civilian contractor and includes the repair of a major number of the test sets. We have addressed the differences in maintenance requirements as they relate to the Mk 48 and the Mk 48 ADCAP.

The records and reports required for the heavyweight torpedo do vary for the Mk 48 and the Mk 48 ADCAP, but as we have just learned, the differences were minimal.

REFERENCES

Ammunition and Explosives Ashore, Safety Regulations for Handling, Storing, Production, and Shipping, NAVSEA OP 5, Naval Sea Systems Command, Washington, D.C., 1990.

Fleet Logistic's Support Manual, Torpedo Mk 48 Mod 1, NAVSEA OD 45814, Naval Sea Systems Command, Washington, D.C., 1976.

Health Hazards of Otto Fuel, NAVMEDCOMINST 6270.1, Naval Medical Command, Washington, D.C., 1985.

Health-NAVOSH-Program Management, OPNAVINST 5100.23, Office of Chief of Naval Operations, Washington, D.C., 1983.

Metrology Requirements List, NAVSEA OD 45854, Naval Sea Systems Command, Washington, D.C., 1986.

Mk 48 Maintenance Policy, NAVSEAINST 8510.11, Naval Sea Systems Command, Washington, D.C., 1988.

Digitized by Google

Otto Fuel II Safety, Storage, and Handling, NAVSEA S6340-AA-MMA-010, Naval Sea Systems Command, Washington, D.C., 1986.

Torpedo Mk 48 ADCAP Off-Line Procedures, NAVSEA SW513-EO-PRO-020, Naval Sea Systems Command, Washington, D.C., 1989.

Torpedo Mk 48 ADCAP On-Line Procedures, NAVSEA SW513-EO-PRO-010, Naval Sea Systems Command, Washington, D.C., 1989.

Torpedo Mk 48 ADCAP Piece Part Inspection Procedures, NAVSEA SW513-EO-PRO-030, Naval Sea Systems Command, Washington, D.C., 1990.

Torpedo Mk 48 ADCAP Weapons System Description and In-Service Support, NAVSEA SW513-EO-MMA-010, Naval Sea Systems Command, Washington, D.C., 1989.

Torpedo Mk 48 all Mods, Weapon System Description for the Mk 48 Torpedo, NAVSEA OP 4020, Naval Sea Systems Command, Washington, D.C., 1976.

Torpedo Mk 48 Assembly, Test and Turnaround, NAVSEA OP 4024, Naval Sea Systems Command, Washington, D.C., 1989.

Digitized by Google

Digitized by Google

CHAPTER 4

MAINTENANCE OF MISSILES AND MOBILE SUBMARINE SIMULATOR SYSTEMS

OVERVIEW

Describe the maintenance levels and the maintenance required for the various missiles and mobile submarine simulators.

OUTLINE

ASROC Maintenance

Harpoon Maintenance

Tomahawk Maintenance

MOSS Maintenance

In this chapter we will discuss maintenance requirements for ASROC, Harpoon, and Tomahawk missiles. We will also give a description and the maintenance requirements of the Mobile Submarine Simulator Systems (MOSS). This information is written at the knowledge level and no attempt is made to provide instructions for skill performance. To actually perform maintenance on these missiles, you should follow the procedures and observe the safety precautions in the applicable OP, OD, SWOP, or MRC. Chapter 6 of the *Torpedoman's Mate Third Class* rate training manual, NAVEDTRA 10168, contains a description of the components, operation, and capabilities of the various missiles. Before you study this chapter, a review of that material may prove beneficial.

ASROC MISSILE MAINTENANCE

Maintenance of the ASROC missile and support equipment includes servicing, repair, retrofit, overhaul, rework, test and inspection; and replacement of assemblies, components, and parts. Maintenance is performed at organizational, intermediate, and depot level maintenance activities. This maintenance is classified as either preventive or corrective. Preventive maintenance provides for missile readiness and operability, prolongs component reliability, and decreases the need for repair. Additionally, preventive maintenance includes periodic inspection, cleaning, checkout, and adjustment of both the missile and its components. Corrective maintenance includes repair and/or replacement of faulty or malfunctioning missile components.

ORGANIZATIONAL LEVEL MAINTENANCE

ASROC maintenance at the organizational level is concerned with assembled missiles and with standard hand tools required to perform maintenance at this level. Organizational level maintenance is performed on the launching platform. However, this maintenance is limited to the replacement of torpedo nose caps, thrust neutralizers, cable assemblies, contactor adaptor assemblies, and motor fins, and the performance of fire control tests of the missile. If a deficiency cannot be corrected on the firing ship, the missile must be transferred to an intermediate maintenance activity (IMA) for further examination.

INTERMEDIATE LEVEL MAINTENANCE

Intermediate level maintenance is accomplished by destroyer tenders (ADs) and antisubmarine warfare (ASW) facilities. The facilities conduct assembly, turnaround, and disassembly of the missile (rocket-thrown torpedo [RTT]); other portions of this maintenance include the inspection and testing of missile components.

Digitized by Google

A detailed checkoff list must be used during all missile maintenance operations. *ASROC Missile Description and Instructions for Assembly, Inspection, and Storage*, SW180-AA-MMI-010/2963, provides checkoff lists for assembly, disassembly packaging, unpackaging, inspection, and turnaround of the missile. Detailed checkoff lists may be prepared locally in any acceptable format. Steps may be added or deleted from the list so it will correspond to the level of detail desired. Prepared checkoff lists and their changes and modifications must include all applicable standard inspection procedures (SIP) contained in the *Quality Assurance Test and Inspection Plan (QATIP)*, 403. Directives issued by cognizant authorities must be consulted for the preparation and use of locally prepared checkoff lists.

An ASROC missile at an intermediate maintenance activity that was received from a transhipment activity (AE/AOE) may be reissued without maintenance under the following conditions:

1. The missile did not leave the ship during deployment and has remained in its original container since assembly.
2. The missile container is still serviceable.
3. Missile records show all components are within service life limitations and not limited or restricted from use.
4. A visual inspection determines that the missile is undamaged.
5. A verification of serialized payload components is compatible with missile records.
6. Missile records are properly annotated to reflect verification inspection.

Missile assembly, turnaround, disassembly, inspection, and component tests, when required, must be done by following the procedures contained in *ASROC Missile Description and Instructions for Assembly, Inspection, and Storage*, SW-180-AA-MMI-010/2963. All personnel involved in missile maintenance must be thoroughly indoctrinated and have an understanding of the safety precautions contained in this manual.

Missile Assembly

Before assembling a missile you should verify that components, assembly tools, and equipment are available; that electrical testing of the ignition separation assembly (ISA) has been conducted; that preparation of the missile assembly fixture is completed; that the deflection telescope has been aligned; that periodic inspection of gyroscope test set Mk 484, test cable safety

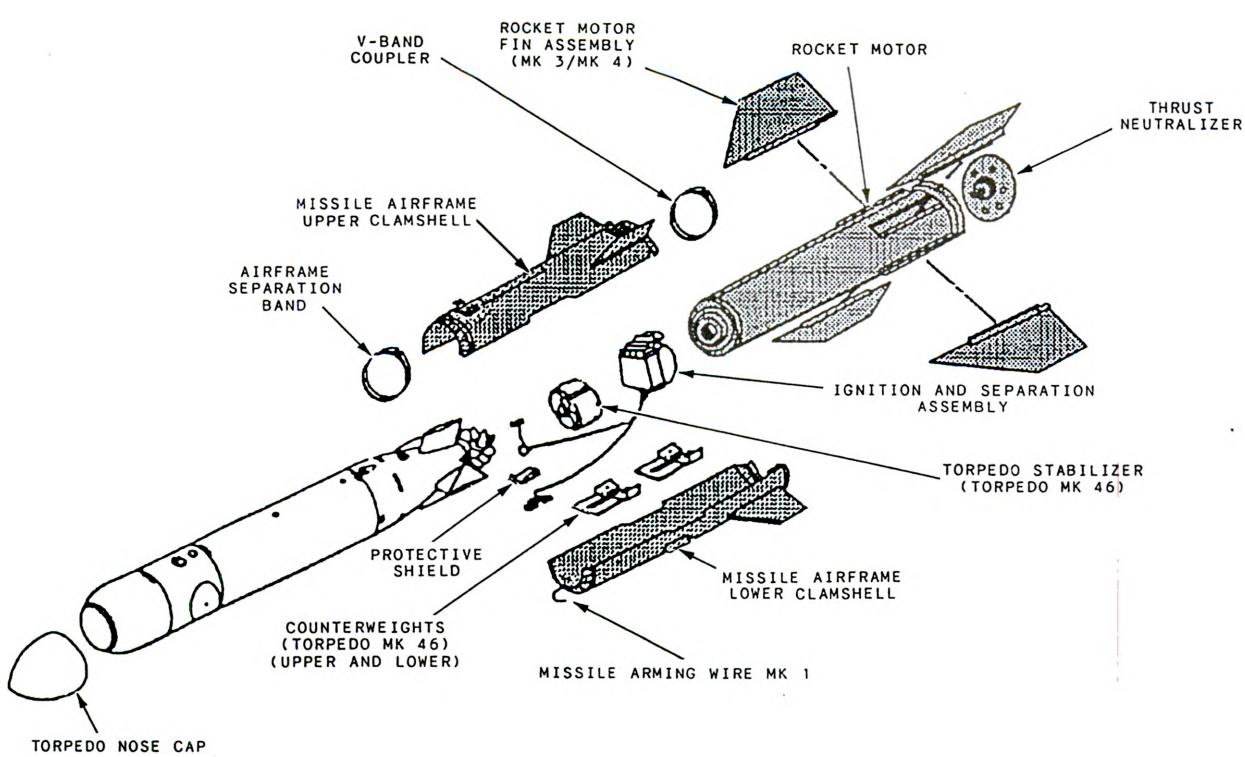

Figure 4-1.—Rocket thrown torpedo (RTT)—exploded view.

Digitized by Google

assurance tests are complete, and that all equipment is within current periodic calibration requirements.

Figure 4-1 shows the required components for the rocket thrown torpedo (RTT).

The recommended assembly sequence for the RTT is as follows: (refer to figure 4-1 for component identification):

1. Prepare missile airframe.
2. Install counterweights in the airframe.
3. Prepare and install the ignition and separation assembly (ISA).
4. Prepare the torpedo for missile assembly.
5. Attach the stabilizer to the torpedo.
6. Install the payload cable connector to the torpedo.
7. Connect the stabilizer deployment cord to the lower clamshell.
8. Assemble the upper clamshell to the lower clamshell.
9. Assemble the airframe separation band (AFS) to the airframe.
10. Perform continuity test and fault isolation.
11. Assemble the rocket motor fins to the rocket motor.
12. Align the rocket motor with the airframe.
13. Assemble the V-band coupler to the airframe and rocket motor.
14. Check launching lug alignment.
15. Assemble the contactor adaptor assembly to the missile (GMLS Mk 26 designated missiles only).
16. Connect the Mk 1 arming wire to the torpedo.
17. Install the nose cap on the torpedo.
18. Check the vertical and horizontal deflections (fig. 4-2).

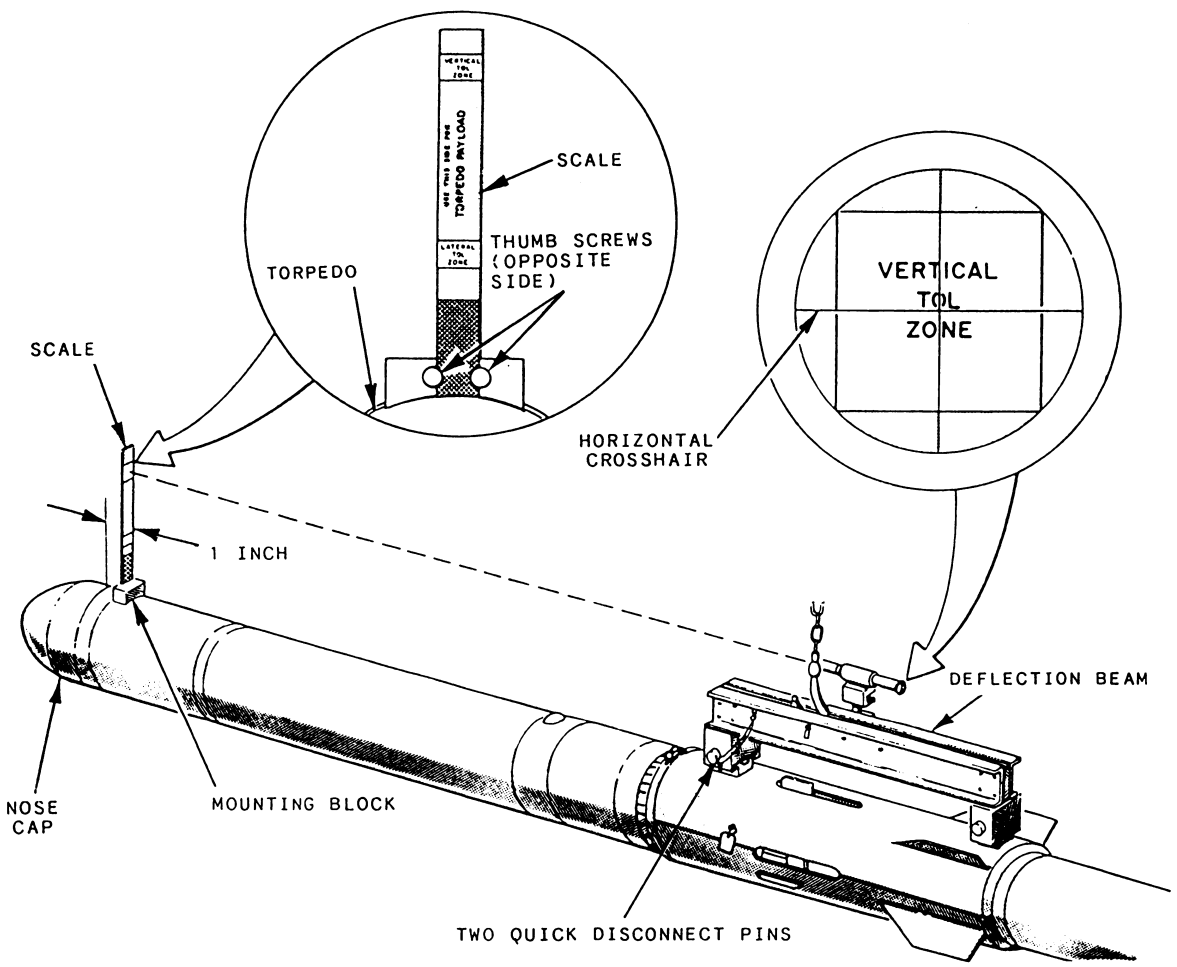

Figure 4-2.—Checking deflection of a rocket thrown torpedo.

Digitized by Google

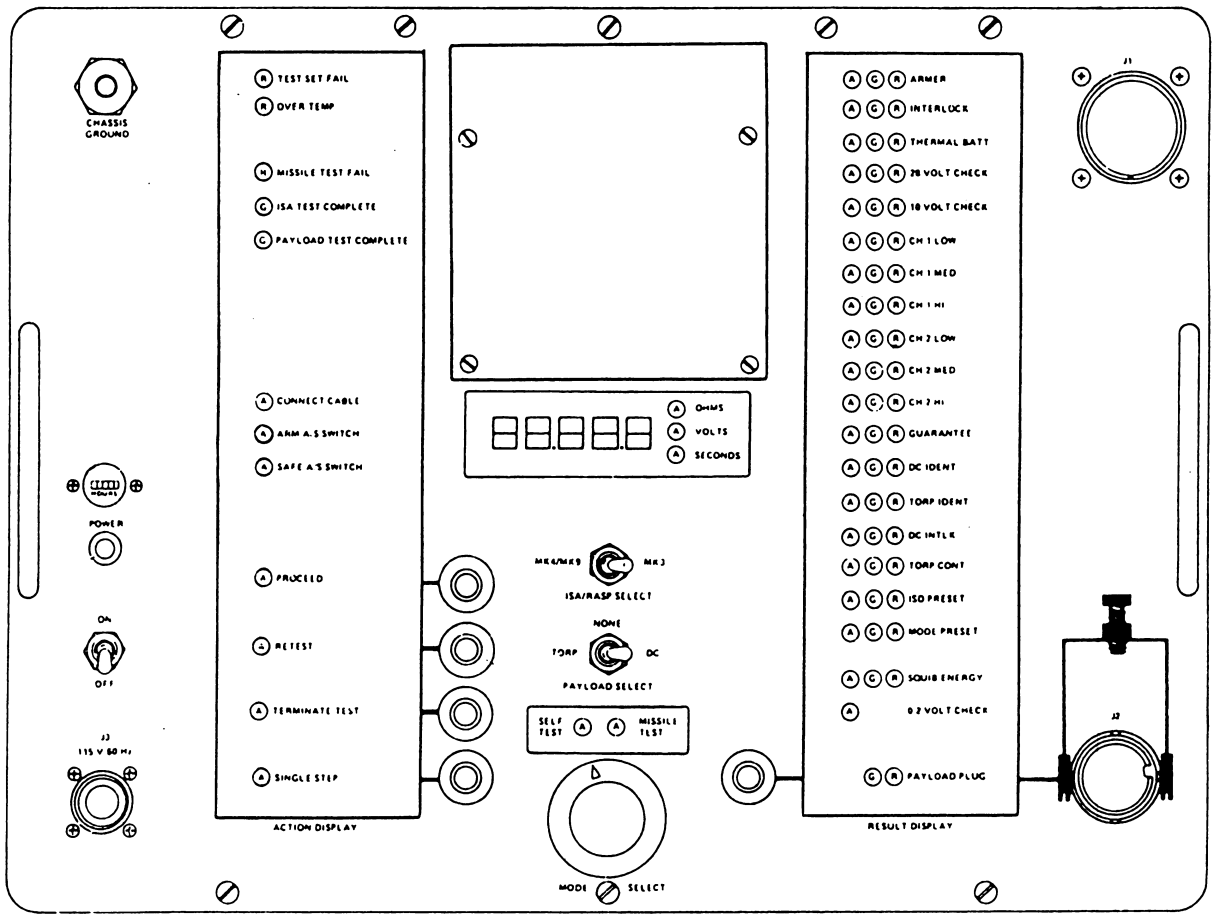

Figure 4-3.—Mk 620 Mod 0 test set.

Missile Turnaround

Missile turnaround is done on fleet return missiles that have sufficient service life remaining for their intended use.

Before missile turnaround, the missile must be unpackaged and inspected. Unpackaging and inspection procedures are contained in SW180-AA-MMI-010/2963.

Missile Disassembly

When a missile has been returned to an assembly facility because of a misfire, expiration of service life, or damage or defects that render the missile unserviceable, it must be disassembled. But before disassembly, the technicians must ensure that service test and handling equipment and standard/special hand tools are available. Equally important is that these equipments are within current calibration and in proper working condition.

Procedures for the disassembly of a missile are essentially the reverse of the assembly procedures. Disassembly procedures of an RTT are contained in SW180-AA-MMI-010/2963.

After disassembly of a missile, all missile components must be inspected for serviceability before they can be used in another missile. A torpedo payload requires a periodic maintenance check after a maximum period of 3 years have elapsed since the last maintenance. The ISA from the missile must be inspected and electrically tested with a hazardous circuit tester and the Mk 620 range and airframe separation programmer (RASP) test set. Figure 4-3 shows the Mk 620 Mod 0 test set.

The hazardous circuit tester is used to check the thermal battery monitoring circuits of the ISA. The Mk 620 mod 0 test set monitors operating voltages in the RASP. It shows the readback time of the programmer functions during a simulated operational test.

Digitized by Google

Component Replacement and Repair

Component replacement of an assembled missile is limited to and dependent upon the availability of parts at the various activities.

Component replacement on assembled missiles aboard firing ships (AD or ASW facilities) includes the replacement of the torpedo nose cap, thrust neutralizer, cable assembly, contactor adaptor assembly, and the motor fins.

Replacement of other components that require missile disassembly are the torpedo, ISA, rocket motor, motor V-band, airframe, airframe band, counterweights, torpedo stabilizer, and the Mk 1 arming wire.

Component replacement performed by ASROC personnel for the torpedo aboard an AD or at an ASW facility is limited to the removal and replacement of the propeller setscrew, installation of spacers on the payload receptacle as required, and the removal and replacement of the seawater battery when necessary.

The repair of components in an assembled missile is limited to the removal of corrosion, repair of minor surface imperfections, and touch-up of exterior paint. After disassembly, the repair of missile components include the application of surface treatments, recementing of certain components, and complete refinishing of externally painted surfaces. The following general guidelines should be used when missile components must be repaired:

1. The missile should be disassembled only to the stage where the defective component is accessible.
2. The defective component must be inspected to determine the extent of repair necessary.
3. Repair of components must be made according to procedures listed or referenced in SW180-AA-MMI-010/2963.

Damaged unpainted aluminum surfaces, painted surfaces, unpainted and unplated/plated steel surfaces must be repaired and refinished. A corrosion preventive compound must then be applied to the affected area. If the surface of a component is scratched or corroded to the extent that the base metal has been damaged, the component must be sent to a designated overhaul activity. Component repairs that are authorized to be made by ASROC personnel at an IMA include the following:

1. The Mk 46 torpedo-maintenance (repair) procedures that can be performed aboard an AD or at an ASW IMA facility are limited to refinishing of corroded or scratched surfaces, cleaning the transducer face, and applying wax to the exterior surfaces.

2. The repair of the missile airframe consists of repairing minor damage to launching and restraining lugs. The repair of any launching or restraining lug is limited to dressing down, to the existing lug surface—any raised metal resulting from dents, nicks, scratches, corrosion, or scores. After repair, alodine aluminum lugs and treat with dry film lubricant. Following repair, inspect the surface for imperfections that may exceed the following conditions. These conditions will result in the rejection of the airframe:

- Dents, nicks, corrosive pits: 1/32-inch deep by 1/4 inch wide.

- Scratches, scores: 1/32-inch deep by any length or position on the weapon.

3. The repair of the torpedo nose cap is limited to mending cracks in the shell skirt area, removing flash (mold imperfections) and sharp edges from foam quadrants, and rebonding fiberglass spring clips inside the shell.

4. The repair of the torpedo stabilizer is limited to the replacement of loose or missing stitching that secures the bag harness to the envelope and the refinishing of metal surfaces.

5. The repair of the rocket motor is limited to the refinishing of minor scratched surfaces, areas of rust, or corroded surfaces.

6. The repair of the ISA is limited to touch-up and refinishing of scratched or corroded metal surfaces, repair of damage to explosive component cable insulation jackets, release of stuck pins in the payload connector, replacement of the three rubber channels on the housing base plate and replacement of ISA Mk 4 components.

7. The repair of the cable assembly involves the application of a protective coat of varnish on cables with aluminum connectors (some cables have stainless steel connectors and do not require a protective coating). The removal of corrosion; the cleaning of the corroded or damaged surfaces, and the application of corrosion preventive compound to clean surfaces are part of this repair.

Digitized by Google

LOGISTICS SUPPORT

Logistics support for the ASROC missile is directed by the Naval Sea Systems Command (NAVSEASYSCOM) and is provided as follows:

1. Logistics support for the torpedo payload and associated test and handling equipment for organizational, intermediate, and depot level maintenance is provided by the NAVSEASYSCOM and Ship's Parts Control Center (SPCC).

2. The ASROC inventory control manager located at SPCC, is responsible for the inventory control of the missile components (4T cognizant). Service test equipment (STE) and spare parts logistics support for the missile components is

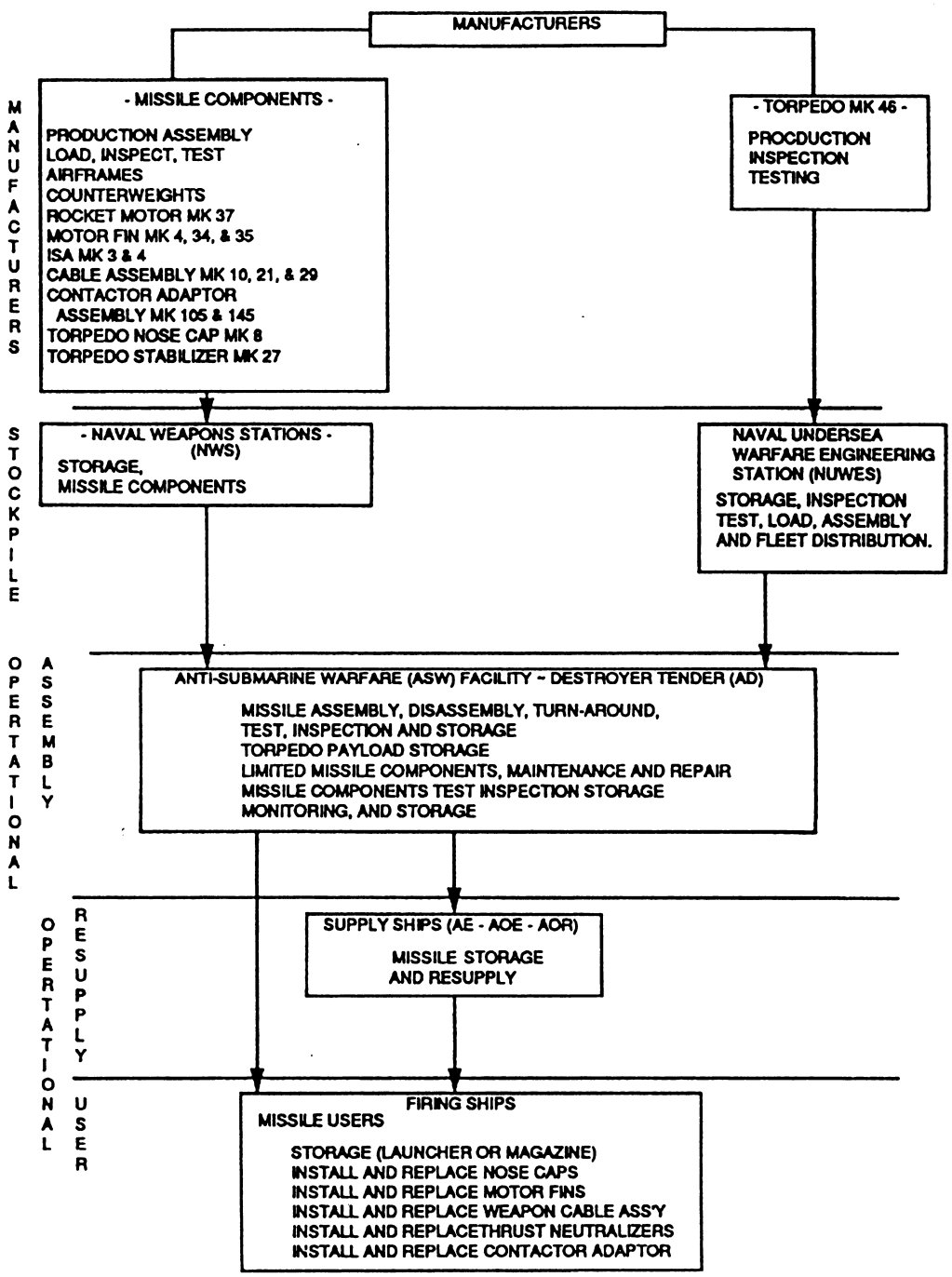

Figure 4-4.—Logistic flow chart for ASROC missile components/spares.

Digitized by Google

provided by the various shore activities under the logistics and funding control of NAVSEASYSCOM and SPCC. An exception to this is the rocket motor Mk 37 and the service handling equipment (SHE) for organizational and intermediate level maintenance.

ASROC components are stored at Naval Supply Centers (NSC) and at intermediate and depot level sites. Both provide for assembly and issue of tactical missiles, exercise missiles, and training missiles.

Figure 4-4 shows the logistics flow for ASROC missile components and spares from the stockpile points through the various facilities to the firing ship.

Major components and repair and replacement parts for an ASROC missile (less payload) are shipped and stored in reusable containers during the stockpile-to-target sequence. At the organizational level (firing ship), the missile is removed from its container and stowed in the ASROC magazine or launcher. The firing ship returns these empty containers to the IMA and reorders containers for off-loading when required. Containers are not stored onboard the firing ship. IMAs stow components in their respective containers. These containers are marked to properly identify the contents including mark/mod designation and serial number when applicable.

Logistics support for ancillary equipment is provided to the organizational and intermediate level activities for test equipment, assembly fixtures, special tools, standard tools, containers, handling equipment, launch accessories, and Navy special interface gauges.

Figure 4-5 shows the logistics flow of ASROC ancillary equipment including handling equipment and test sets at the organizational and intermediate level activities.

Supply Support Responsibilities

Support responsibilities have been delegated to the various inventory control managers (ICM) based upon hardware peculiarities and the level of maintenance to be supported. Principal ICMs and support responsibilities are assigned to NAVSEA and SPCC. Supply support for service

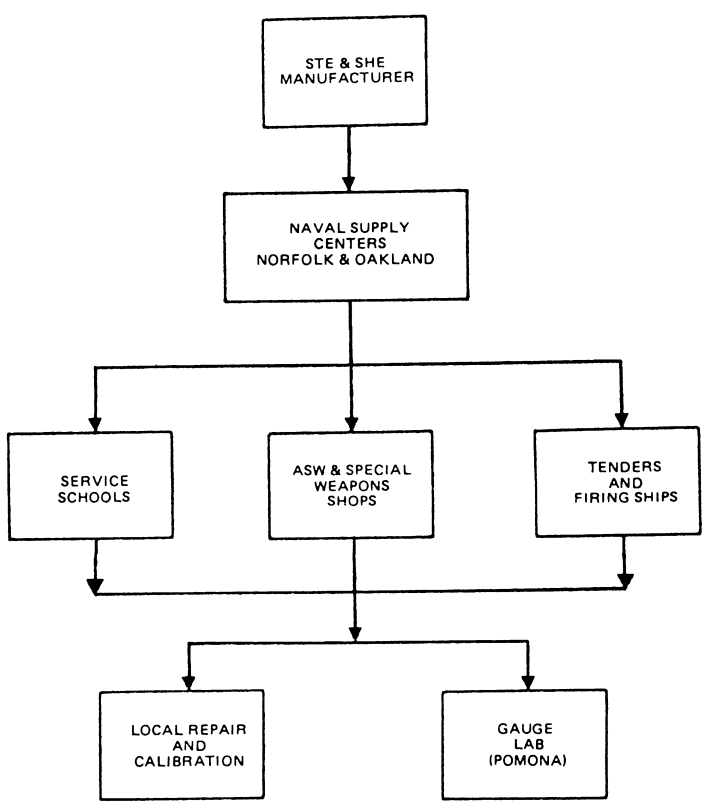

Figure 4-5.—Logistic flow diagram for ASROC ancillary equipment.

Digitized by Google

test equipment is listed in table 4-1. The inventory control manager's responsibilities include the following:

1. Issuing desired stock status information
2. Initiating of timely procurement for items in low supply
3. Expediting completion of fleet requisitions
4. Programming repair of defective hardware
5. Expediting return of defective material
6. Determining the most expeditious transportation routing
7. Providing supply follow-up
8. Tracing lost material
9. Performing property accounting
10. All other functions normally associated with inventory control management

Material Requisitions and Replenishment

A requisition must be submitted for replenishment of all ASROC material supported by the federal supply service. The Single Line Item Requisition System Document, DD Form 1348, is used according to MIL-STD *Requisition Issue Procedures Manual*, NAVSUP Publication 437, or *Afloat Supply Procedures*, NAVSUP Publication 485, as applicable for requisitioning purposes. Material that is defective when received from the federal supply service will be reported to the Navy Fleet Material Support Office in accordance with NAVSUPINST 4440.120. Exceptions to reportable items are enumerated within the instruction. All facilities requiring ASROC missile components (less payload) must submit their requisitions to SPCC. SPCC will authorize the movement of components from the stockpile centers to the requesting activity.

Urgent requisitions may be submitted by naval message or via telephone. If a naval message is chosen because of urgency, it shall be addressed as applicable to the following activities:

1. NSC Oakland, California, or Norfolk, Virginia (all National Supply System cognizant material except 8A and 4T).
2. NSC Oakland, California, or Norfolk, Virginia (8A cognizant material).
3. SPCC (4T cognizant material).

Spare parts usage data is maintained by each cognizant inventory control manager and is based on information obtained from requisitions. Each activity should maintain its own inventory control system, indicating location of material, usage data, material on order, and quantity on hand. Each activity should maintain an active follow-up system of condition code reporting and shipment status.

REPORTING REQUIREMENTS

The inventory control managers must be advised of all movements of 4T cognizant material (torpedoes, torpedo components, and ASROC components). A DOD Single Line Item Release and Receipt Document, (DD Form 1348-1) must be used for submitting reports to the ASROC inventory control manager.

DD Form 1348-1 and DD Form 1149

Requisition and Invoice Shipping Document, DD Form 1149, is used by the ASROC inventory control manager for shipment of all 4T cognizant items and for initial outfitting. Copy one of DD Form 1348-1 and copy one of the DD Form 1149 carry a stamped block for use in the verification of receipt for materials received. Activities in receipt of material from the inventory control manager will sign, date, and return copy one to verify receipt of the equipment.

ASROC REPORTING SYSTEM

All shore activities and fleet units engaged in assembly, storage, transfer, or use of the ASROC missile must complete an Intermediate/Organizational Maintenance and Transaction Log (NAVSEA Form 8830/1 [1A]). The Intermediate/Organizational Maintenance and Transaction Log contains the following sections:

1. Section I—IMA Report
2. Section II—Transaction Log
3. Section III—Firing Ship Report

The purpose of **section I (IMA Report)** is to document the data that is acquired during ASROC missile and missile component inspection, assembly, turnaround, disassembly or testing, and to report defective components discovered during any of the procedures.

The purpose of **section II (Transaction Log)** is to document each action involving change of custody, serviceability status, or expenditure of the assembled ASROC missile. The activity initiating the entry in section II is responsible for forwarding a copy of section II to: Commanding Officer, Naval Weapons Station, Seal Beach Detachment, Naval Warfare Assessment Center (Code 3433), Corona, California 91720-5000, within 24 hours of the action.

The purpose of **section III (Firing Ship Report)** is to document the data required for the Consolidated ASROC Database that is acquired during fleet custody of an ASROC missile.

Digitized by Google

Table 4-1.—Required Support for Service Test Equipment (STE)

Designation	Nomenclature	LD, DL or Dwg No.	Quantity Required at each Facility (Per Line)					Function	Inventory Support Control Managers	Calibration Frequency
			Firing Ship	AD	ASW	AE/AOE	Schools			
—	Safety Chamber	LD497717 1805670	0	1	1	0	2	ISA Test	SPCC	—
Mk 620 Mod 0		DL1984645	0	1	1	0	1	ISA/RASP Test	Navy Gauge and Standards Center, Pomona, Calif.	1 year
	Safety Chamber Assy	DL5268367	0	1	1	0	1			—
	Motor Band Shield Assy	DL5268373	0	1	1	0	1			—
	Airframe Band Shield Assy	DL5268379	0	1	1	0	1			—
Mk 484 Mod 1	Gyroscope Test Set	3277490	0	1	1	0	3	Fault and Isolation Test	SPCC	6 months
—	Test Cable	5268192 (SK690183)	0	1	1	0	3	Continuity Test ISA Mk 3	NOSC	Test Daily When Used
—	Tool, Pin Release	1984969 (SK690152)	0	1	1	0	3	Fault and Isolation Test	NOSC	—
—	Test Pin	2169737	0	2	2	0	3	Fault and Isolation Test	NOSC	—
—	ASROC Payload Test Adaptor	—	0	1	2	0	2	Continuity Test ISA Mk 4	NOSC	—
—	Multimeter AN/PSM-4D or Simpson 260	—	0	2	2	0	3	Fault and Isolation Test	SPCC	1 year
—	Beam Indicator Assembly	1806042	0	1	1	0	1	Missile Deflection Checks	Navy Gauge and Standards Center, Pomona, Calif.	1 year
—	Gauge Alignment Launching Lug (LG Mk 16)	1805883 or 3018165	1	1	1	0	1	Checks Launching Lug Alignment	Navy Gauge and Standards Center, Pomona, Calif.	1 year
—	Gauge Alignment Launching Lug (GMLS Mk 26)	3030318	1	1	1	0	1	Checks Launching Lug Alignment (GMLS Mk 26)	Navy Gauge and Standards Center, Pomona, Calif.	2 years
—	Gauge, Not Go Wear Template	3236987	0	1	1	0	1	Checks wear of Lug ears on ASROC Launching Lug	Navy Gauge and Standards Center, Pomona. Calif.	2 years
—	Gauge, Airframe Alignment	3018165	0	1	1	0	1	Checks Airframe Alignment	Navy Gauge and Standards Center, Pomona, Calif.	1 year

Digitized by Google

Table 4-2.—EHWS Maintenance Concept

Maintenance Level				
WEAPON SYSTEM ELEMENT	ORGANIZATIONAL: SUBMARINE	EXPANDED ORGANIZATIONAL: AS (SELECTED SHORE SITES)	INTERMEDIATE: WPNSTA-CONCORD/ YORKTOWN	DEPOT
TSS DMS	● Complete system checkout ● Fault isolate ● Replacement of circuit cards/ component parts ● Ordance Alteration (ORDALT) incorporation	NA	NA	● TSS-NOS/IH MD DMS-NUWES Keyport
Encapsu-lated HARPOON Missile	● Loading and handling ● Receipt inspection ● Perform BIT ● Replacement of faulty lanyards, umbilical cables and shear pins ● Corrosion control	● Handling and Ready-For-Issue (RFI) storage ● Receipt inspection ● Replacement of faulty lanyards, umbilical cables and shear pin ● Exterior cleaning and paint touch-up	● Subsystem checkout ● AUR system checkout ● Encapsulate ● Repair capsule	● Repair capsule ● MDAC
HARPOON Missile (slick)	NA	NA	● Complete system checkout ● Fault isolate ● Replacement of failed components ● Incorporate equipment im-provements	● Repair of components beyond the Intermediate Level Capability Component Manu-facturer
Containers Mk 630 Mod 0	NA	● Handling ● Inspection ● Decontainerizing ● Containerizing	● Storage ● Repair	● Established Channels

Digitized by Google

HARPOON MAINTENANCE

Maintenance of the Encapsulated Harpoon Weapon System (EHWS) and its supporting hardware is done at the organizational, intermediate, and depot maintenance levels. The maintenance concept of the weapon system is shown in table 4-2. Organizational level maintenance is done by military/contractor personnel. Intermediate level maintenance is performed by military and Navy civilian and contractor personnel. Maintenance required beyond the capability of intermediate level maintenance activities is completed by the applicable equipment manufacturer. Maintenance peculiar to the submarine launched configuration of the EHWS involves the following Harpoon related items:

1. Surface Attack Guided Missile Capsule Assembly UGM-84A-1/C-1/D-1 and UTM-84A-1/C-1/D-1
2. Test set simulators (TSS) TS-3521DSM
3. Digital Missile Simulator Mk 75 Mod 0 or Mod 1
4. Encapsulated Harpoon Missile Mk 630 Mod 0 Shipping Container
5. Common Support Equipment
6. Certification Training Vehicle - interim (CTV-1)
7. Encapsulated Harpoon certification and training vehicle (EHCTV) Peculiar Support Equipment

ORGANIZATIONAL LEVEL MAINTENANCE

Organizational level maintenance of the EHWS (Maintenance of Missiles, Encapsulated Harpoon Command and Launch Subsystems (EHCLS), digital missile simulator, and test set simulator) is completed by SSN personnel.

The encapsulated missile (fig. 4-6) is loaded aboard the submarine as an All-Up-Round

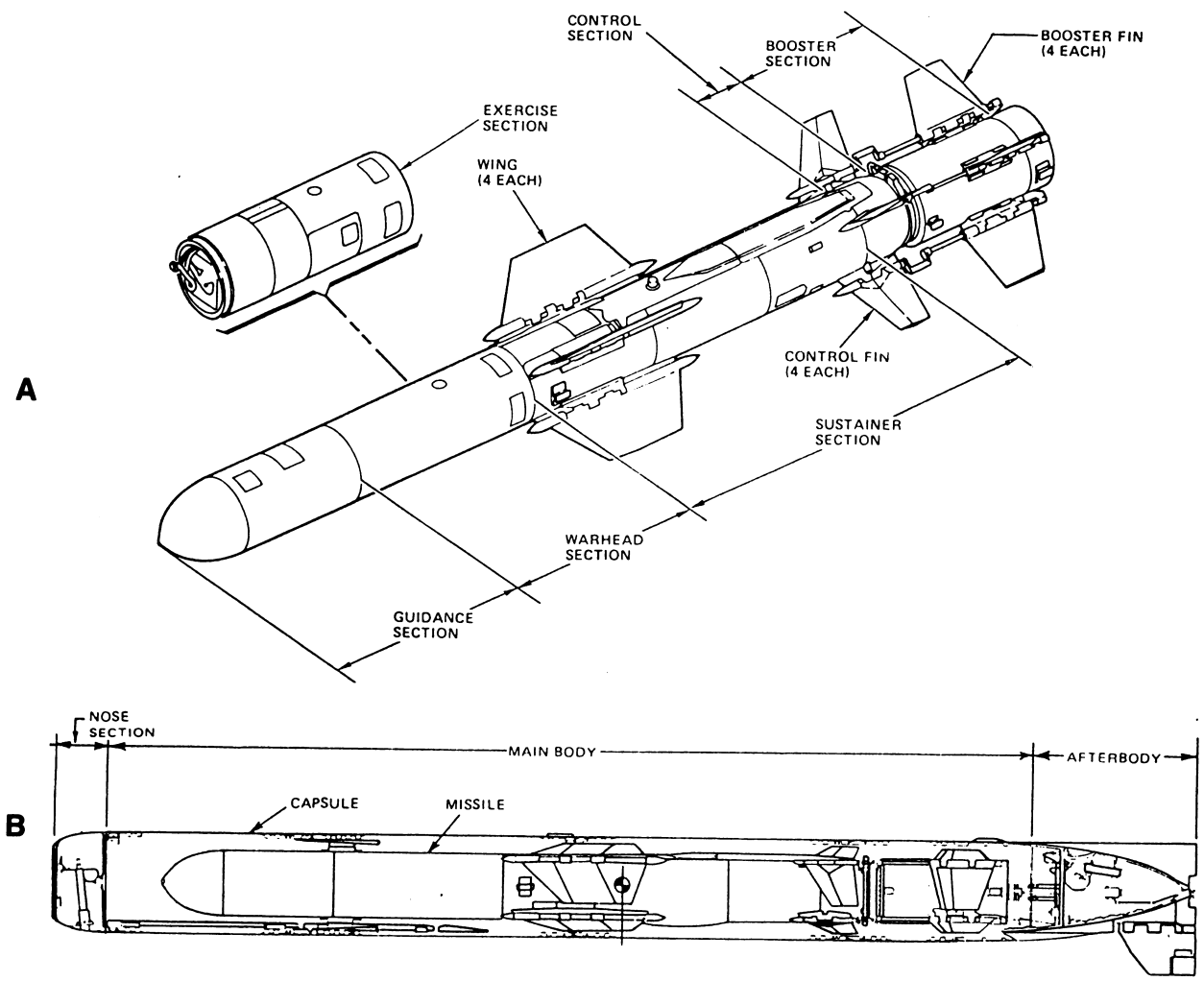

Figure 4-6.—A. Harpoon missile configuration; B. Encapsulated Harpoon missile.

Digitized by Google

(AUR). Upon receipt by the SSN, the missile is inspected according to procedures in *Firing Craft Operating Procedures and Checklist for Encapsulated Harpoon*, OD 44979, Volume 9. The missile is then tube loaded and a missile built-in-test (BIT) is performed. As long as the missile is on board, the BIT is repeated semiannually according to applicable MRC procedures. The BIT is also required just prior to unshipping the weapon. Missiles failing receipt inspection criteria or BIT checks are returned to the weapon station (WPNSTA) for corrective action. Current maintenance concepts also provide for a 48-month operational deployment from the date of the AUR test at the WPNSTA, after which the encapsulated missile must be returned for retest. Capsule corrective maintenance aboard the SSN is limited to the following actions which may be done by TMs:

1. Repair or replacement of defective umbilical cables
2. Replacement of defective lanyards, fin restraint rivets
3. Visual inspection of external surfaces
4. Corrosion control

Organizational maintenance of the EHCLS is done by Fire Control Technician personnel. It is limited to periodic self-tests conducted according to the Planned Maintenance System (PMS) documentation and the limited replacement of defective modules and components identified through fault isolation and troubleshooting procedures. Maintenance of the EHCLS hardware does not include intermediate level repair.

Maintenance of the test set simulator at the submarine level is done by Fire Control Technicians and is limited to the following actions:

1. Operation of self-tests according to PMS documentation
2. Replacement of minor parts (knobs, screws, lamps, and so forth)
3. Fault isolation and limited repair (replacement of modules and components)

There is no planned maintenance for the fault isolation kit at the submarine level. Operational suitability of the various modules/components will only be determined when they are used in troubleshooting the applicable EHCLS equipment. Replacement for modules/components found to be defective will be requisitioned from the supply system by ship's force.

Scheduled maintenance of the digital missile simulator consists of tests and inspections prescribed in the MRCs. The MRCs provide specific procedures for quarterly lamp and self-tests and annual visual inspection and cleaning. For corrective maintenance, troubleshooting is done by means of test and fault isolation procedures provided in the DMS technical manual *Description, Operation, and Maintenance for the Digital Missile Simulator Mk 75 Mod 0*, ST890-JO-MMO-010/DMS. These DMS procedures use maintenance assistance modules (MAMs).

INTERMEDIATE LEVEL MAINTENANCE

Intermediate level maintenance for the EHWS and the Mk 630 Mod 0 missile container is performed at the WPNSTA Concord, California, or the WPNSTA Yorktown, Virginia. Submarine tenders (ASs) and shore-based submarine support facilities provide only missile inspection, storage, and transshipment functions.

Encapsulated missiles returned to the WPNSTA Concord, or the WPNSTA Yorktown, for intermediate level maintenance are de-encapsulated, inspected, and AUR tested. Missiles that exhibit a fault during AUR tests must be returned to the depot for repair, or if the fault is within the intermediate level maintenance repair capability, they must be disassembled. After disassembly, the defective section or replaceable assembly is replaced with an operational section, or replaceable assembly and then retested. Tests of the capsule by an intermediate level maintenance activity include continuity and isolation tests, fault isolation of the electrical circuitry, vacuum leak tests, and a pressure check of the capsule and the broach sensor.

Repairs of Harpoon missile containers are accomplished by repair facilities at NWS Concord, and NWS Yorktown.

DEPOT LEVEL MAINTENANCE

Depot level maintenance is performed by the component manufacturer. Maintenance requirements for the missile at the depot level include the following:

1. Repair of components that are common to other Harpoon weapon system applications
2. Repairs that are beyond the capabilities of organizational and intermediate levels
3. Failure diagnosis of removed units/assemblies

Digitized by Google

SUPPORT PROGRAMS

Supply support for the EHWS is based on the three-level maintenance concept. However, not all components of the system are maintained at each level. The program as it relates to submarines has a limited ECHCS supply support at all levels. Supply support for the encapsulated missile, digital missile simulator, and test set simulator is at the organizational level only. Program management for supply support of the weapon system is delegated to the following activities:

1. Encapsulated Harpoon
   a. Naval Air Systems Command (NAVAIRSYSCOM) AIR-42032A1 Inventory Control Manager
      (1) NAVAIRSYSCOM AIR-4181A1 Assistant Program Manager—Logistics (APM/L)
      (2) Naval Underwater System Center (NUSC) (Code 8312)—Technical Cognizant Activity (for Capsule only)
      (3) NUSC (Code 8313)—Integrated Logistics Support (for Capsule and CAP/CAN Test Set only)
      (4) Naval Ship's Parts Control Center (NSPCC) (Code 05332B)—Inventory Control Point
      (5) Naval Weapons Center (NAVWPNCEN) (Code 3606)—Technical cognizance of the basic (slick) Harpoon Missile de-encapsulated)
      (6) Pacific Missile Text Center (PMTC) (Code 1091)—In-Service Engineering Agent for the Encapsulated Harpoon in the AUR Configuration
2. Test Set Simulator (TSS)
   a. NAVSEASYSCOM SEA-62H Program Manager
      (1) Naval Ordnance Station/Indian Head (NOS/IH) (Code 5241A)—Technical Cognizant Activity
      (2) NSPCC (Code 532)—Inventory Control Point
3. Digital Missile Simulator (DMS)
   a. NAVSEASYSCOM PMS 409—Program Manager
      (1) Naval Undersea Warfare Engineering Station (NUWES) Keyport—Acquisition Engineering Activity In-Service Engineering Agent
      (2) NSPCC—Inventory Control Point (Code 532)
4. (Encapsulated Harpoon Certification and Training Vehicle (EHCTV)
   a. NAVSYSCOM (PMA-258E)—Deputy for Submarines
   b. NAVAIRSYSCOM (PMA205-11)—Assistant Program Manager-Training
   c. USC (Code 8312)—Technical Cognizant Activity
   d. USC (Code 8313)—Integrated Logistics Support Manager
   e. NSPCC (Code 05332B)—Provisioning Supply Point

Naval Underwater Systems Center (NUSC) has been designated technical fleet support coordinator for installation and subsequent maintenance of the EHWS in the submarine fleet and at the submarine support facilities. Fleet support uses services of personnel from NUSC, Naval Sea Support Center Atlantic/Pacific (NAVSEACENLANT/PAC), PMTC, and contractor personnel as required.

Initial Outfitting

Initial outfitting of onboard spares, repair parts, and related equipment is provided through the federal supply service according to Coordinated Shipboard/Shore-Based Allowance Lists (COSALs/COSBALs), Allowance Parts Lists (APLs), and Allowance Equipage Lists (AELs). Responsibility for timely requisitioning of initial outfitting items is based on the circumstance under which the SSN is provided Harpoon weapon system capability as described in subsequent paragraphs. Adequate requisitioning lead time should be planned to ensure receipt of support materials before installation is completed.

NEW CONSTRUCTION INSTALLATIONS.—SSNs acquiring Harpoon capability during new construction (SSN 688 Class) will be outfitted by the shipyard's outfitting supply activity (OSA). The OSA should acquire applicable COSAL/AEL/APLs from SPCC and requisition support items through the federal supply service.

INSTALLATION DURING REGULAR OVERHAUL (ROH).—SSNs acquiring Harpoon capability during ROH (SSN 594 and 637 Class) will be outfitted by the Integrated Logistic Overhaul Program (ILOP) team. The ILOP team should requisition onboard spares by using NAVSUP Pub 485 and current allowance

Digitized by Google

documentation for the applicable SSN fire control system configuration.

INSTALLATION DURING RESTRICTED AVAILABILITY (RAV).—SSNs acquiring Harpoon capability during RAV will be outfitted by the ship's supply department. The ship's supply department working with the NAVSEACENLANT/PAC team should requisition allowable onboard spares, repair parts, and related equipment by using NAVSUP Pub 485 and the allowance documentation applicable to the particular SSN fire control system configuration.

The majority of hand tools required aboard submarines are available at the required EHWS designated sites. Support and test equipment not already available aboard SSNs are furnished at the time of weapon system hardware installation. General-purpose electronic test equipment items are furnished according to the SPETERL.

Material Replenishment

A requisition must be submitted for the replenishment of all Harpoon material supported by the federal supply service. Routine requisitions are submitted on a DD Form 1348, according to the *MILSTRIP/MILSTRAP Operating Procedures Manual*, NAVSUP Pubs 437 or 485. Receipt of defective material from the federal supply service is reported to the Navy Fleet Material Support Office according to NAVSUPINST 4440.120. Exceptions to reportable items are enumerated within the instruction.

Disposition of Defective Hardware

Mandatory deficiency reports are required, when, during incoming inspection or receipt and damage inspection, handling operations, and/or preparations for firing, deficiencies are discovered that prevent the employment of a weapon and/or result in an unscheduled offload. Also reported are all corrective maintenance actions performed on the missile. An example being the replacement of umbilical cables or the lanyard assembly during loading operations and the performance of a BIT, conducted according to Harpoon fire control MRCs, that results were negative.

Reports of Unsatisfactory or Deficient Torpedoes and Equipment (RUDTORPE) are used to provide or request information relative to procedures, documentation, hardware disposition, and support problems. Both deficiency reports and RUDTORPEs are submitted on Torpedo Maintenance Data Form, NAVSEA 8510/5 and according to the *Torpedo Management Information System (TMIS)*, TW510-AA-PRO-020/030.

All defective encapsulated Harpoon missiles must be returned to the weapon station, with all residual hardware.

DOCUMENTATION RECORDS AND REPORTS

Documents and records perform highly essential functions in the operation of the weapon system. Publications contain and convey the factual data and procedural instructions required to guide and indoctrinate personnel in the proper operation of the system. Operational records, including reports of successful operation, failure, or malfunction, are required to be maintained. They indicate the degree of success with which the weapon system is performing its function, and point the way to desired or necessary improvement. Finally, routine records provide a system for accountability and an audit of condition history—either of which should be left to memory.

OPs, ODs, and other support documentation are listed in table 4-3. Initial distribution of OPs and ODs and subsequent changes or revisions thereto are made automatically according to the distribution list applicable to each document.

In support of (3-M's) PMS, MRCs have been prepared by NUSC for the EHWS support aboard submarines currently having operational capability for Harpoon missiles. MRC data basically consist of preventive maintenance information to support EHWS. Corrective procedures to support maintenance requirements are included in appropriate technical manuals.

Records are required to provide a complete history of significant events occurring during the life cycle of each encapsulated missile and to maintain accountability of its major serialized components. Effective reports are necessary to enable the distribution of essential maintenance, deficiency, and operational performance data to cognizant activities for engineering analyses. Recognition, reporting, and subsequent resolution of existing or potential system deficiencies are thereby facilitated and system readiness and capability improved. Feedback information resulting from the analysis of the reports is provided to maintenance activities in the fleet and to contractor repair facilities, subsequently enhancing overall logistics support of the weapon system.

Digitized by Google

Table 4-3.—EHWS Documentation/Publication Support

TECHNICAL MANUAL NUMBER	TITLE
ASW-TP-018-C-1240	Weapon System Consolidated Operability Test for FCS Mk 117 Mods 1, 2 and 3
MIP J-001/XXX-XX	Maintenance Index Page - CCS Mk 1
MIP J-117/XXX-XX	Maintenance Index Page - FCS Mk 117
MIP J-1084/002	Maintenance Index Page - Missile Encapsulated HARPOON UGM-84
OD 43690, Vol. 6	ASW Weapon Systems Accuracy Trials Program for Submarines with Fire Control System Mk 117 Mods 1, 2 and 3
OD 44979, Vol. 1	Introduction and Description
OD 44979, Vol. 2, Part 1	Firing Craft Operating Procedures and Checklists for Weapon Loading and Handling System for SSN-637 Class Submarines
OD 44979, Vol. 2, Part 2	Firing Craft Operating Procedures and Checklists for Weapon Loading and Handling Systems for SSN-671
OD 44979, Vol. 2, Part 3	Firing Craft Operating Procedures and Checklists for Weapon Loading and Handling Systems for SSN-685
OD 44979, Vol. 2, Part 4	Firing Craft Operating Procedures and Checklists for Loading and Handling Systems for SSN-594 Class Submarines
OD 44979, Vol. 2, Part 5	Firing Craft Operating Procedures and Checklists for Weapon Loading and Handling Systems for SSN-688 Class Submarines/Ships Systems Manual (0I-631-3)
OD 44979, Vol. 3, Part 5	Firing Craft Operating Procedures and Checklists for Fire Control System Mk 117 Mod 0/Ship Systems Manual (0I-631-31)
OD 44979, Vol. 3, Part 7	Combat Control system Mk 1
OD 44979, Vol. 3, Part 11	Combat Control System Mk 1
OD 44979, Vol. 4, Part 5	Firing Craft Operating Procedures and Checklists for Weapon Emergencies, Fire Control System Mk 117 Mod 0
OD 44979, Vol. 4, Part 6	Firing Craft Operating Procedures and Checklists for Weapon Emergencies, Fire Control System Mk 117 Mods 1, 2, and 3
OD 44979, Vol. 4, Part 7	Weapons Emergencies, CCS Mk 1

Digitized by Google

Table 4-3.—EHWS Documentation/Publication Support—Continued

TECHNICAL MANUAL NUMBER	TITLE
OD 44979, Vol. 9	Firing Craft Operating Procedures and Checklists for Encapsulated HARPOON Missile (UGM-84A-1)
OD 44979, Vol. 17	Weapon Monitoring Equipments
OD 46376	System Installation Data (SSN 700) for FCS Mk 117 Mod 0
OD 46579	Fire Control System Mk 117 Mod 0, General Information Manual (SSN 700)
OD 49329	General Information Manual (Mk 117 FCS Backfit)
OD 49330	Installation Data (Mk 117 FCS Backfit)
OD 49376	Fire Control System Mk 117 Mod 0, Installation Data
OD 50288	Fire Control System Mk 117 Mods 0, 1, 2 and 3, Operations Manual
OD 53342	Logistics Support Manual for Encapsulated HARPOON
OP 3548	Torpedo Tube Mk 63 Mods 1-12
OP 4042	Underwater Battery Fire Control Switchboard Mk 41 Mods 10 and 11 for SSN 686 and SSN 687, Description, Operation and Maintenance
OP 4057	Torpedo Tube Mk 63 Mods 13-16 (SSN 685)
OP 4152, Vols. 1-2	Underwater Battery Fire Control Switchboard Mk 41 Mods 12 and 13 for SSN 688 Class, Description, Operation and Maintenance
OP 4240	Description, Operation and Maintenance, Attack Control Console Mk 92 Mod 0 and Mod 2
OP 4263, Vols. 1-3	Description, Operation and Maintenance, Weapon Data Converter Mk 82 Mods 1 and 2
NAVAIR 01-A/ RGM84A-2-3.5	Intermediate (Weapons Department Afloat/Ashore) Maintenance, Missile Sentencing Instructions for HARPOON Missile Configurations, Surface Attack-Capsule-UGM-84A-1, UGM-84C-1, Exercise Training-Capsule-UTM-84A-1, UTM-84C-1, Training Inert Warhead-Capsule-UTM-84A-1A, UTM-84C-1A
17-15MDA-16	Description, Operation and Maintenance Instructions with Parts List, HARPOON Capsule and Canister Test Set, Part No. 72D205011-1013, -1015 and Halogen Gas Detector Assembly Part No. 72D205616-1003
NAVAIR ILSP 4133-8408 PMA-258B	Integrated Logistic Support Plan for Encapsulated HARPOON Missile Certification and Training Vehicle (EHCTV)
NAVAIR 01-UTM-84A-1D	Servicing and Maintenance Manual for Encapsulated HARPOON Certification and Training Vehicle (EHCTV) UTM-84A-1D

Digitized by Google

Table 4-3.—EHWS Documentation/Publication Support—Continued

TECHNICAL MANUAL NUMBER	TITLE
SW820-AG-MMO-010/ (C)UGM-84	Encapsulated HARPOON Description, Operation and Maintenance Manual
N/A	Missile-Missile Related Post Conference Provisioning Parts List, 21 December 1984, Revision K, Volume II
TBD	NAVAIR Naval Airborne Weapons Maintenance Process Specification, 31 January 1984
ST890-J0-MMO-010/ DMS Mk 75 Mod 0	Description, Operation and Maintenance Digital Missile Simulator Mk 75 Mod 0
ST890-J1-MMO-010/ DMS Mk 75 Mod 1	Description, Operation and Maintenance Digital Missile Simulator Mk 75 Mod 1
SW820-AB-WHM-010/ HARPOON Handling QATIP 445	Handling, Maintenance and Stowage Procedures and Quality Assurance Test and Inspection Procedures (QATIP), Encapsulated HARPOON Missile
TW510-AA-PRO-020/TMIS	Torpedo Management Information System, TMIS Organizational Level Maintenance Activity, Reporting Instructions for Submarine Fired Weapons/Vehicles
TW510-AA-PRO-030/TMIS	Torpedo Management Information System, TMIS Intermediate Level Maintenance Activity, Reporting Instructions for Submarine Fired Weapons/Vehicles

Harpoon Equipment History and Operating Log

The Harpoon missile history log sheet is the primary vehicle used to record the history of each assembled weapon. It is a chronological record of operations performed by each activity. Receipts, shipments, tests, inspection, firing attempts, expenditures, and other events are entered in accordance with log sheet instructions. Organizational level users of the encapsulated Harpoon weapon must use the log sheet to record BITs also. Continuation sheets should be added as needed. Each time the missile is received at the NWS, an up-to-date copy of the Harpoon missile history log sheet will be sent to FLTAC.

The Harpoon Configuration and Operating Logbook will accompany the missile. When the missile is fired or otherwise expended, the log is returned to the Officer in Charge, Fleet Analysis Center (FLTAC), WPNSTA, Seal Beach, Corona, California. The logbook is a composite of several different maintenance data forms: Collection-Configuration Summary, NAVSEA Forms 9790/5, Harpoon Missile History Log Sheet (FLTAC-8821), Fleet Maintenance Data Collection Form (ALMS) (NAVAIR 4790/1), Fleet Configuration Summary Forms (OPNAV 8600.2/1), and instructions on use and completion of the different forms.

Torpedo Management Information System (TMIS)

TMIS is governed by NAVSEAINST 8510.3. The Torpedo Maintenance Data Form (NAVSEA-SYSCOM Form 8510/5) is the vehicle used to

Digitized by Google

TORPEDO MANAGEMENT INFORMATION SYSTEM
TORPEDO MAINTENANCE DATA FORM
(NAVSEA FORM 8510/5)

2. DOCUMENT NO

UNIT ID CODE (UIC)	ACTION JULIAN DATE	ACTION SEQ. NO.

SECTION I – IDENTIFICATION

1 ACTIVITY/SHIP NAME/HULL NUMBER

SECTION II – DESCRIPTION

3 REPORT TYPE
- (1) ☐ MAINTENANCE
- (2) ☐ DEFICIENCY
- (3) ☐ ORDALT/CHANGE
- (4) ☐ LOGISTIC
- (5) ☐ RUDTORPE
- (6) ☐ OTHER (SPECIFY)

4. EQUIPMENT REPORTED ON
- (1) ☐ WEAPON/VEHICLE
- (2) ☐ TEST/SUPPORT EQUIPMENT
- (3) ☐ DOCUMENTATION/PROCEDURES
- (4) ☐ SPARES
- (5) ☐ OTHER (SPECIFY)

5. TYPE OF ACTION
- (1) ☐ WARSHOT TURNAROUND/VERIFICATION
- (2) ☐ PREPARATION/CONVERSION
- (3) ☐ SPECIAL RETURN ACTIONS

MK 46 ONLY
CLASS "A" ☐ "B" ☐

- (4) ☐ EXERCISE (POST FIRING) TURNAROUND

IF EXERCISE TURNAROUND ACTION, ENTER FIRING DATA BELOW

UIC	JULIAN

6 DEFICIENCY FOUND DURING

WEAPON/VEHICLE
- (1) ☐ RECEIPT/DAMAGE INSPECTION
- (2) ☐ DISASSEMBLY INSPECTION
- (3) ☐ COMPONENT TURNAROUND
- (4) ☐ COMPONENT/FIR TEST
- (5) ☐ INITIAL ASSEMBLY
- (6) ☐ SYSTEM TEST
- (7) ☐ FINAL ASSEMBLY
- (8) ☐ RUN ANALYSIS
- (9) ☐ OTHER (SPECIFY)

TEST EQUIPMENT
- (1) ☐ CALIBRATION
- (2) ☐ WEAPON/VEHICLE TEST
- (3) ☐ SELF TEST
- (4) ☐ VISUAL INSPECTION
- (5) ☐ FIR TEST
- (6) ☐ OTHER (SPECIFY)

7 WEAPON/VEHICLE/EQUIPMENT I. D.	MK	MOD	REGISTER/SERIAL NO.	8. RUN NUMBER	S/R	9. TORPEDO NALC INCOMING	OUTGOING	10. MOD	11. NEXT SCHEDULED MAINTENANCE
									CLASS "A" ☐ "B" ☐ DSLE ☐

12 TEST EQUIP. ☐ USED ☐ DEFICIENT	MK	MOD	SER. NO	S/R	13. TEST DOC/PROCEDURE ☐ USED ☐ DEFICIENT	VOL.	REV.	CHANGE	PARA/STEP

SECTION III – MATERIAL IDENTIFICATION/ACTION

14 ASSY/FIR ITEM/PART	DRAWING NUMBER AND REVISION	REFERENCE DESIGNATOR	SERIAL NUMBER	REPLACEMENT SERIAL NUMBER	16 ORDALT/CHANGE NO	16 R/I	17 S/R	18 P/D	19 JS/CL/TABLE	TEST TAPE AND REV	20 FILE CODE/ TEST STEP	BLOCK

21. NARRATIVE (1) DESCRIPTION (2) SHOP ACTION (3) RECOMMENDATIONS

22 REC'D FROM (UIC)

SHIP TO (UIC)

23. MANHOUR/MATERIAL EXPENDITURES		24. REFERENCES/ENCLOSURES
MANHOURS	MATERIAL COST	
		25. NAME OF ORIGINATOR

SUBMITTED DATE (JULIAN)

Figure 4-7.—Sample Torpedo Maintenance Data Form.

Digitized by Google

report deficiencies, corrective maintenance, and informal Report of Unsatisfactory or Deficient Torpedoes and Equipment (RUDTORPES) (fig. 4-7).

The Torpedo Maintenance Data form is routinely used by submarines to report expendable ordnance item maintenance, ordnance alteration (ORDALT) accomplishments, and as an informal communication link between submarines and cognizant technical and supply support agencies. The Torpedo Maintenance Data form provides for closing the loop between the using activity reporting the problem and the cognizant technical activity taking actions toward satisfactory problem resolution. Responses are provided to originators and problem statuses are tracked until they are closed out.

It is important to note the importance of submitting Torpedo Maintenance Data forms when events occur. This will ensure timely response to fleet reported problems.

NAVSEA technical document TW510-AA-PRO-020/TMIS provides the organizational level maintenance activity reporting instructions for encapsulated Harpoon deficiency reports and RUDTORPEs. In addition, this document outlines the collecting, processing, and utilization responsibilities for those engineering, technical, and supply agencies directed by COMNAVSEA to support the TMIS.

NAVSEA technical document TW510-AA-PRO-030/TMIS provides the intermediate level (submarine tenders (ASs) and shore-based support facilities) maintenance activity reporting instructions for encapsulated Harpoon RUDTORPE submissions. In addition, this document outlines the collecting, processing, and utilization responsibilities for those engineering, technical, and supply agencies directed by COMNAVSEA to support the TMIS.

Maintenance and Material Management (3-M) Systems

The 3-M Systems are dual purpose in nature. They provide for the preparation of preventive maintenance documentation (MRCs) as well as for the collection of data (MDCS). The 3-M Maintenance Data Collection system (MDCS), as it applies to the EHWS, provides maintenance data relative to the nonexpendable ordnance (EHCLS, fault isolation kit, digital missile simulator, and test set simulator) portion of the weapon system. The governing document for organizational level use is OPNAVINST 4790.4.

Conventional Ammunition Integrated Management System (CAIMS)

Whenever a EHCTV, or its Container Mk 630 is received or shipped, the activity will submit individual Ammunition Transaction Reports (ATRs) to NSPCC to satisfy CAIMS requirements. This is accomplished in accordance with current fleet and/or NSPCC instructions (CINCLANTFLT INST 8010.4, COMNAVLOGPAC INST 8015.1, and NSPCC INST P8010.12). CAIMS accepts ATRs that are submitted as formatted standard naval messages. The CAIMS data is collected by NSPCC for purposes of inventory control and identification of current asset location. CAIMS data is subsequently provided to FLTAC Central Data Collection Agency (CDCA) in accordance with a data exchange program. CAIMS data is also on line to NAVAIRSYSCOM, NAVSEASYSCOM, Naval Weapons Support Center (NWSC), and selected TYCOM locations.

TOMAHAWK MAINTENANCE

The Tomahawk cruise missile maintenance concept reduces required maintenance at the organizational and intermediate maintenance levels. Weapon reliability is based on the contractor's certification that system components will function within design specification for a specified period of time: 30-36 months depending on the variant of the missile. Before expiration of the certification period, AURs are returned to the Tomahawk Weapons Facility (TWF) or Tomahawk Preparation Facility (TPF) for required maintenance and recertification. Offload and return shipment must commence sufficiently in advance of the maintenance due date to allow for transit time. To meet operational requirements, force commanders may extend the maintenance due date up to a maximum of 90 days. Requirements for extending due dates in excess of 90 days are addressed to CMP (PDA14-414) for approval. Due date extensions are recorded in the appropriate Tomahawk Book.

Digitized by Google

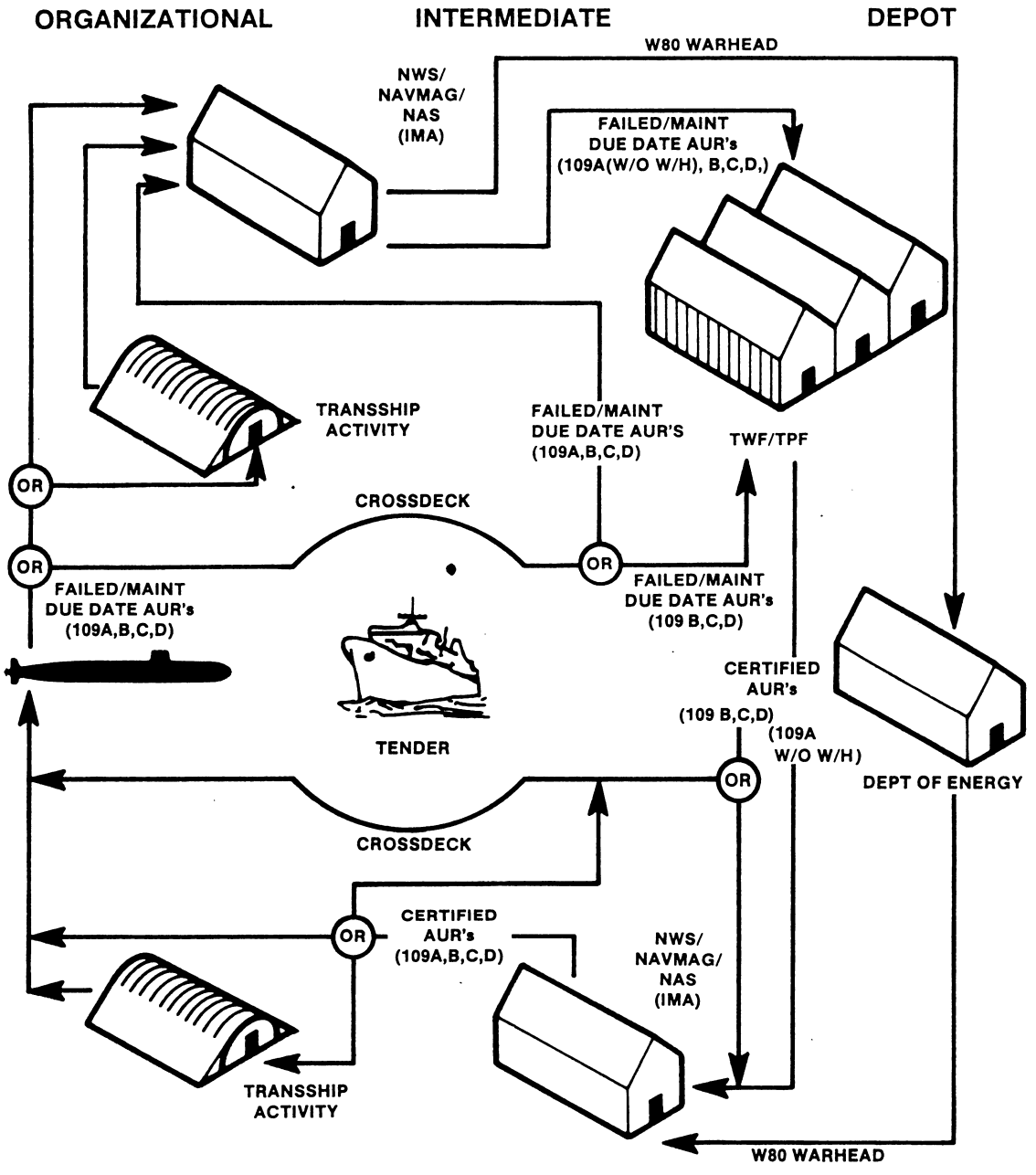

Figure 4-8.—Tomahawk Vertical Launch All-Up-Round Logistics Flow Chart.

New and recertified Tomahawk cruise missiles are fueled, warheaded (except UGM-109A-2), assembled, and stored at the TWF/TPF until they are encapsulated in the CLS, Mk 45 Mod 0 to become the vertical launch AUR. The UGM-109A-2 warheading cycle is performed at designated shorebase intermediate maintenance activities. Figure 4-8 reflects production flow, and figure 4-9 depicts the typical Tomahawk vertical launch AUR logistics flow from the TWF/TPF to the submarine and return.

ORGANIZATIONAL LEVEL MAINTENANCE

The concept of organizational level maintenance is to remove and replace the AUR when it becomes due for recertification, or on an unscheduled basis when instrumentation or

Digitized by Google

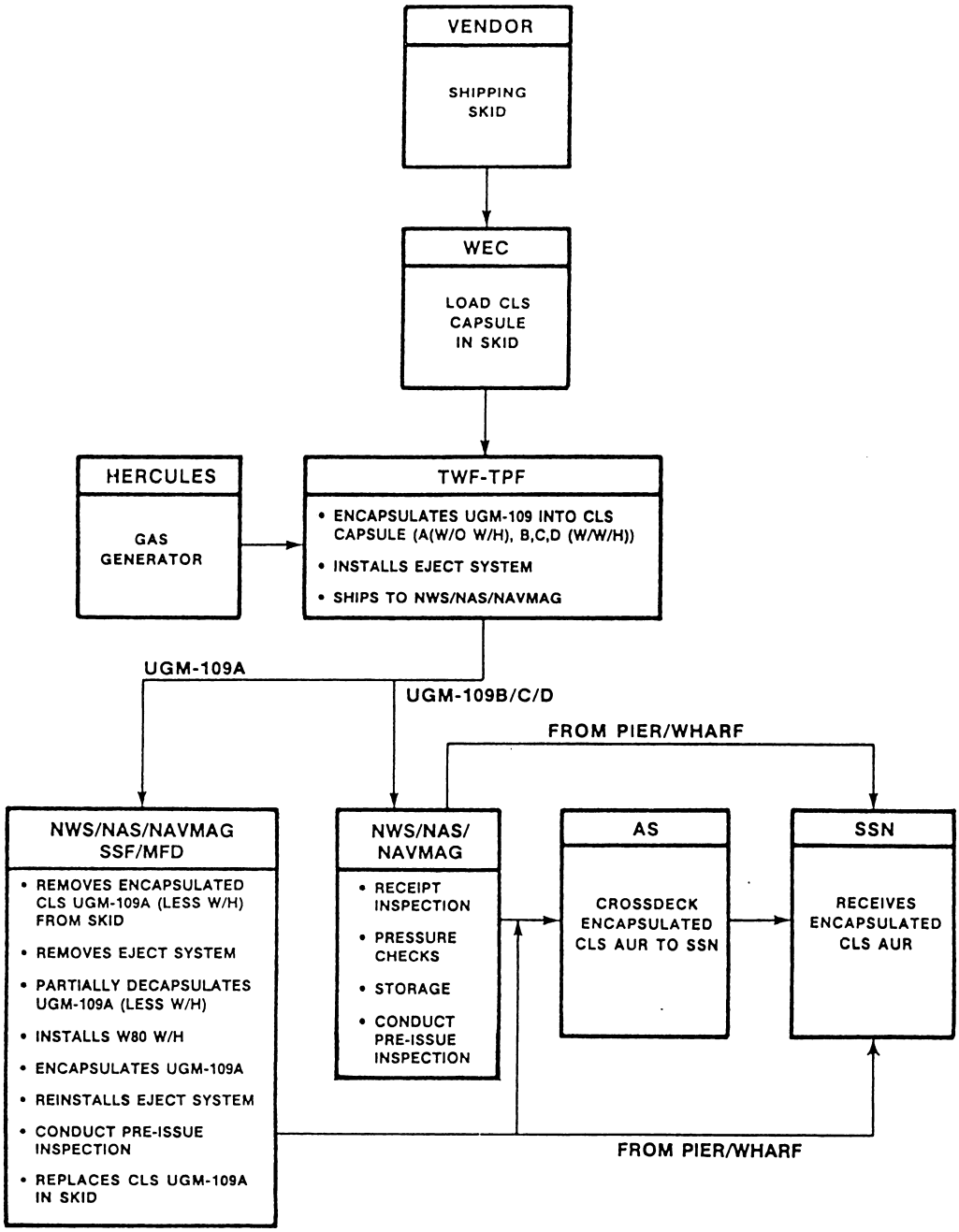

Figure 4-9.—Tomahawk Vertical Launch All-Up-Round Production Flow Chart.

malfunction indicates component/system failure. Organizational maintenance is limited to the segment ring and umbilical connection during off-loading of the AUR. In the case of expended capsule launcher offload, organizational maintenance also includes removal of capsule launching system (CLS) residue from the submarine missile tube.

Organizational level maintenance aboard a submarine is restricted to visual inspections, corrosion preventive actions on the capsule exterior, periodic nitrogen recharging, preparation for launch actions, and replacement of pneumatic and electrical umbilicals. Instructions for these maintenance functions are described in OD 44979 and appropriate MRCs.

Digitized by Google

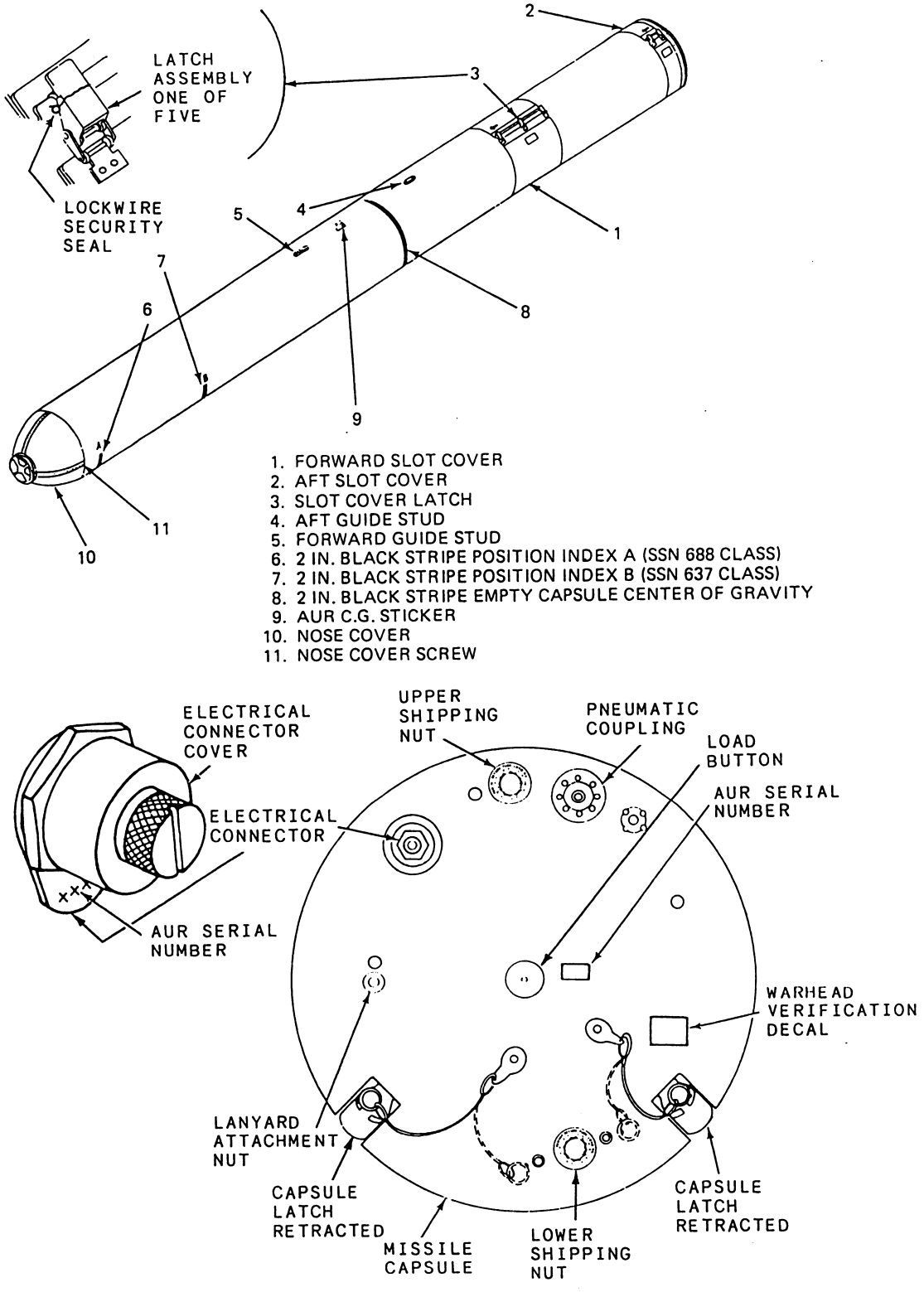

Figure 4-10.—Tomahawk Receipt Inspection Points.

Digitized by Google

Figure 4-10 shows the receipt inspection points of the Tomahawk missile.

INTERMEDIATE LEVEL MAINTENANCE

Intermediate level maintenance is carried out aboard submarine tenders while at designated submarine support facilities, naval weapon stations, naval magazines, and special weapons facilities. Maintenance is limited to the operations associated with periodic monitoring/replenishment of nitrogen in the missile, routine visual inspection, corrosion prevention tasks, replacement of electrical and pneumatic umbilicals, capsule security equipment (i.e., nose cover, slot covers, security plate), and replacement of the diaphragm. IMAs must conduct stray voltage and continuity checks as part of the warhead installation/extraction procedure on the UGM-109A variant. This procedure also requires the removal/replacement of the capsule diaphragm and partial decapsulation of the missile.

Designated submarine tenders that are used as deployable storage and weapons resupply ships for assigned submarines, provide the following capabilities:

1. Performs intermediate level maintenance and repair functions on all tactical missiles and support equipment
2. Performs Warheading of the UGM-109A-2 variant
3. Provides magazine storage of missiles for issue to submarines
4. Provides storage, issue, in-fleet recovery, and immediate postrun maintenance (limited to exterior surfaces) of Tomahawk test missiles (TOTEM)
5. Returns missile shipments to the TWF for recertification
6. Provides for limited dockside storage for shipping containers
7. Provides for the maintenance of support and test equipment and warhead training

Designated naval magazines (NAVMAGs)/naval weapons stations (NWSs)/special weapons facilities (SWFs)/submarine support facilities (SSFs), or submarine bases (SUBASEs) used as storage and issue facilities for submarines and submarine tenders provide the following capabilities:

1. Performs intermediate level maintenance and repair functions on all tactical missiles and support equipment
2. Performs Warheading of the UGM-109A-2 variant
3. Provide magazine storage of missiles for issue to submarine
4. Stores, issues, and refurbish TOTEM
5. Returns missile shipment to the TWF for recertification
6. Provides storage for empty shipping containers
7. Provides for the maintenance of support and test equipment and warhead training

DEPOT LEVEL MAINTENANCE

Depot level maintenance is identified as those tasks beyond the intermediate level maintenance activity's capability. The refurbishment, repair, recertification of missiles, and other scheduled maintenance tasks are considered depot functions. Depot maintenance will be done by the contractor at the TWF. The TWF, besides issuing, recertifying, and maintaining tactical missiles, will issue and turnaround REM-equipped missiles. Handling shapes and TOTEM will have their major overhaul performed at designated depots.

SUPPORT PROGRAM

To implement the Tomahawk Cruise Missile System and sustain its operational readiness, support site training/certification, initial outfitting, distribution of technical documentation, coordination of technical fleet support, and interim support are required.

Fleet Technical Support

The AUR development, management, and technical cognizance are the responsibility of Cruise Missile Project (CMP). Configuration management will be accomplished by (CMP) throughout the service life of the weapon system. Fleet support may be obtained by contacting CMP Logistics (PDA14-41).

Naval Underwater Systems Center has been tasked to assist CMP in managing certain functions of the program through Material Support Data (MSD). Specific tasks include serving as Inservice Engineering Agent (ISEA) for

Digitized by Google

support and test equipment, providing evaluation of technical manuals, evaluating engineering changes to ensure maintenance of missile/capsule/missile tube interfaces and specified supply support functions.

Site Preparation/Activation

The commencement of Tomahawk cruise missile support functions at designated activities requires the accomplishment of a number of logistics tasks to ensure the availability of required resources. Principally, the extent of these requirements are determined by the scope and volume of support operations intended at the site. Surveys directed by CMP determine the extent to which available resources at the site can satisfy these requirements and help identify shortfalls. These shortfalls constitute the net logistics requirements for site activation and generally fall into the following areas:

1. Storage, transfer, and maintenance facilities
2. Tools and consumables
3. Support, test, and handling equipment
4. Technical documentation
5. Personnel
6. Training

The allocation of appropriate logistics resources to meet the shortfalls at any particular location is addressed in detail in the site activation plan for the specific site in question.

Initial Outfitting

The NUSC, as part of its ISEA function, provides initial outfitting of common tools, support equipment, handling equipment, consumables, and spare parts to designated submarines, submarine tenders, shore stations, and school facilities. This is initially reflected in appropriate AEL, APL, and subsequently in COSAL/COSBAL documents. Responsibility to request initial outfitting of SSNs depends upon when the system installation occurs. Generally, during new construction installation, NUSC coordinates and supplies materials to the shipyard that does the installation. Requests for initial outfitting during ROH is the responsibility of the fleet Integrated Logistics Overhaul (ILO) team. NUSC coordinates their efforts to provide initial outfitting with the ILO team to ensure that requisitions are not submitted through the supply system for outfitting material which NUSC provides. In all cases, however, NUSC is the supplier of the required materials based on AEL, APL, and applicable COSAL authorized allowances.

AUR Support

The AUR is supported as a depot level turnaround end item under joint cruise missile project (JCMP) contracts. Spare requirements for the AUR and its related support equipment at organizational and intermediate level are controlled by JCMP but they may task an interim support about to supply the material. Fleet maintenance is supported by NUSC.

Supply Support

The NSPCC has been assigned program support responsibilities for the Tomahawk weapon system.

Submarines off-load AURs to supporting AS tenders and shore facilities, who returns the AURs to the TWF for normal recertification or unscheduled maintenance, as applicable. A TMIS report, NAVSEA Form 8510/5, is required in the event of an unscheduled off-load. TOTEM refurbishment facilities will be established to support platform certification and training requirements. Tomahawk Fitment Shape (TOMFISH) is available for use by shipyards to certify submarine Tomahawk handling systems and torpedo tubes.

Nonstandard Support

Ship's supply personnel are responsible for unique Tomahawk spare parts. Special procedures for inventory control of those spare parts are required as part of the management of the items.

STOCK RECORDS.—Stock record cards containing part number and locator information must be maintained on the Tomahawk unique items in a file separate from the ship's stock.

REPAIR/REPLENISHMENT.—Items already in the federal supply service (FSS) should be requisitioned through supply channels and must be accounted for according to supply procedures. Tomahawk unique spare parts that are not in the FSS are requisitioned as follows:

1. Maintenance personnel must identify required replacement items as repairable or nonrepairable by applying normal internal ship

Digitized by Google

procedures. Item identification should include the following information:

a. End item
b. Part Number (Federal Supply Code for Manufacturer [FSCM])
c. Nomenclature
d. Repairable or nonrepairable
e. National Stock Number (NSN) (if assigned)
f. Quantity required
g. Date material required
h. Urgency of need

Note: Repair instructions, illustrated parts breakdown, and parts list are included in the appropriate equipment maintenance manuals. Part numbers may be identified in the APL Management Form as well.

2. A Storekeeper must determine if the unique item is aboard ship. If the required item is on board, the Storekeeper issues the part and recovers the failed unit. A Torpedo Maintenance Data form must be filled out by the originating maintenance facility and sent directly to NUSC. This should be the only direct contact organizational level and intermediate level maintenance activities have with NUSC. If a unique item was replaced from the ship's spares, the Storekeeper must requisition a replacement item using a DD Form 1348, to maintain the onboard allowance level.

REQUISITION DATA.—Spare or repair parts support is obtained by means of requisitions, DD Form 1348, being submitted to NSPCC or a Defense Logistics Agency (DLA) activity as appropriate. The National Stock Number (NSN) or the Navy Item Control Number (NICN) are used on the requisition to identify the items.

If an item listed on the AEL or APL is not on board for a required repair or replacement, the item should be requisitioned from NSC or DLA, as appropriate. If immediate repair or replacement is necessary to meet operational or training schedules, SPCC and NUSC should be notified by naval message. If the need for an item is extremely urgent, NUSC may be contacted by telephone. If the use of a phone is selected, the transaction must be confirmed by message. If the required part is not listed in the AEL or APL and a NSN or NICN is not available, contact NUSC directly and inform NSPCC.

Items that are nonrepairable at the intermediate level must be stored while awaiting disposition instructions. A Storekeeper must send a Torpedo Maintenance Data form to NUSC, who will in turn, determine disposition of the items and provide disposition instructions. The Storekeeper must then pack and ship or dispose of the items as instructed.

NUSC REQUISITION PROCESS.—To meet immediate operational or training schedule requirements for low cost NSN items (under $100.00 each), a naval message will be submitted in accordance with MILSTRIP/MILSTRAP and NAVSUP Pub 485 to the cognizant supply support activity as reflected in the Navy Maintenance Data List (NMDL); requirements for high cost NSN items (over $100.00 each) and non-NSN items will be submitted to NUSC in accordance with the above cited publications. The requisitioning activity will provide information copies to CMP (PDA14-41), NSPCC (code 05344), and NUSC (code 8313) as appropriate.

Related Equipments

Pressure servicing kits used to maintain and check the pressure of encapsulated missiles, pressure vacuum distributors used to purge and repressurize missile guidance cavities, and Mk 438 test sets are provided as contractor furnished equipment (CFE). NUSC provides spare supply support for these items until the supply support system becomes available.

CFE, such as the warhead installation trainer and removal stand, is also spare-supported by NUSC. When repair/replacement exceeds IMA/NUSC capability, NUSC must determine disposition of the items and negotiate a contract through the Joint Control Missile project (JCMP) with the with the contractor.

Pneumatic and electrical umbilicals are shipped inside a shipping container with a tactical AUR to a submarine by the issuing activity. Reuse of electrical umbilicals previously subjected to seawater is prohibited. Used electrical umbilicals, or any umbilical beyond repair capabilities, must be red tagged, stowed in a designated area, and off-loaded at the first opportunity to a servicing IMA. The IMA submits a Torpedo Maintenance Data form and holds the umbilicals pending disposition instructions. Used umbilicals are generally refurbished and used with TOTEMs. TOTEM umbilicals must be shipped via an I-level activity immediately after use to NUSC for

Digitized by Google

refurbishment. Unused umbilicals must be returned with the AUR to the contractor.

Nuclear Support

Nuclear support equipment and the necessary supply support are provided by NSPCC (code 8551) according to Special Weapons Operating Procedures (SWOP) 100 and NAVSOP 1500. This material is identified in COSAL's 95000 series. Requisitions for inert nuclear weapons material (8A) should be submitted to Code 900 at the Navy Supply Center, Oakland, California, or NSC Norfolk, as appropriate.

Disposition of Used/Damaged Material

Receipt of defective material from the federal stock system (FSS) is reported to Navy Fleet Material Support Office according to NAVSUP-INST 4440.120 and to NUSC with a Torpedo Maintenance Data form. The Torpedo Maintenance Data form is not to be submitted for common hardware items. Disposition instructions for defective, damaged, or saltwater-exposed components or equipment may be obtained by submitting a Torpedo Maintenance Data form.

DOCUMENTATION

Documents regulate all aspects of the Tomahawk vertical launch AUR system during its life cycle. These actions are taken to assure system reliability and have the provision for monitoring areas of the program for possible improvement. These documents fall into two broad categories:

1. Manuals and instructions that are primarily regulatory in nature, prescribing standard operating procedures relative to safety, security, accountability, and so forth, for all similar items in the Navy inventory.
2. Discrete system documentation and manuals are specifically written to support the Tomahawk vertical launch AUR system describing physical, functional, and operational characteristics as well as maintenance, handling, and operational readiness requirements. System manuals also serve as instructional tools.

The 3-M Systems is a dual-purpose system providing for scheduled maintenance through the PMS and data collection through the MDCS.

REPORTS

The TMIS conveys reports of maintenance activity at the user level to the cognizant activity for data collection. The Torpedo Maintenance Data Report is the vehicle used to convey reports of damaged, faulty, failed equipment, and ineffective documentation. For the Tomahawk missile, NUSC has the responsibility of maintaining and disseminating this information. If problems should arise with warheads or warhead missile interfaces, an Unsatisfactory Report (UR) must be submitted to Naval Ordnance Station, Indian Head Detachment, McAlester, Okla., in accordance with SWOP 5-8.

ATRs must be submitted to NSPCC info CMP, by fleet activities, per CINCLANT-FLTINST 8010.4, COMNAVLOGPACINST 8015.1, and NSPCCINST P8010.12. This data is collected by NSPCC for the purpose of inventory control and identification of current asset location to meet the requirements of CAIMS. CAIMS data are subsequently provided to the FLTAC Central Data Collection Agency according to a data exchange program.

A submarine launched Tomahawk missile must immediately be reported by a firing report.

RECORD BOOK

The purpose of the record book for Tomahawk cruise missile (JCMP PUB 4440) is fivefold:

1. It provides a record of both the modes of transportation and duration.
2. It provides a record of AUR handling.
3. It provides a record of all tests involving the AUR only.
4. It provides a history of maintenance and significant events.
5. It provides a record of any waivers/deviations to the technical manual acceptance/rejection criteria.

The record book must be kept current and must be returned with the weapon to the Tomahawk Weapons Facility at the time of recertification, unscheduled maintenance, or conversion.

Data from the record book is added to test data generated during recertification and other tests. The type of activity, date of receipt, and date of transfer must be noted in the record book. To associate conditions of transportation and storage with other data, the type of activity

Digitized by Google

Table 4-4.—MOSS System Scheduled Maintenance

FREQUENCY	MAINTENANCE ACTION
Weekly	Inspect the MOSS hold down straps and dual tray lashing straps for tightness. (The hold down straps are tightened by hand, dual tray lashing straps are torqued to 100 ± 5 foot-pounds.)
21 Days	Launcher inspection when stowed in a torpedo tube
21 Days	MOSS-loaded launcher inspection when stowed in a torpedo tube
Within 6 hours of tube draining	MOSS treatment following exposure to a flooded torpedo tube condition
Within 6 hours of tube draining	Launcher treatment following exposure to a flooded torpedo tube condition

having custody of the missile between recertifications must also be known.

Classified information is entered in the record book on pages 1 and 6 only. The record book becomes classified CONFIDENTIAL FRD (Formerly Restricted Data) when the first entry is made on page 6. When the warhead is installed and the missile is moved, an entry is made on page 1 and the data is classified CONFIDENTIAL FRD.

In a pocket in the back of the record book are green cover sheets. These sheets must be immediately removed and attached to the front and back covers once a classified entry is made in the record book. Appropriate data (serial number and configuration and recertification date) from the original covers must be entered on the new green cover sheets.

MOBILE SUBMARINE SIMULATOR (MOSS) SYSTEM MK 70 MOD 0

The Mobile Submarine Simulator System (MOSS) Mk 70 Mod 0 consists of the following subsystems: Mk 57 Mod 0 mobile submarine simulator, Mk 136 Mod 0 launcher, Mk 5 Mod 2 dual stow and load tray, and the Mk 348, Mod 1 fire control panel. MOSS system accessories consist of a loading pole, bridge assembly, dual-tray extenders (10- and 19-inch), exercise sections, synchronous clock extenders, warm cable and guard assembly (expendables), and batteries.

The MOSS system is offloaded from the submarine at the end of each routine deployment cycle. The vehicle, launcher, dual tray, loading pole and bridge are returned to the tender for checkout, maintenance and refurbishment prior to redeployment. MOSS vehicles are turned around in accordance with the procedures specified in SW570-A0-MMI-010/MK 70. As with the other weapons systems we have discussed, the MOSS has three levels of maintenance: organizational, intermediate, and depot. We will start our coverage with the organizational level.

ORGANIZATIONAL LEVEL MAINTENANCE

Organizational level maintenance for the vehicle, launcher, and dual tray entails replacement of the warm cable and A-cable as required. You should conduct a visual inspection with wiping down of the vehicle and launcher after immersion in water, and exterior cleaning of the dual tray. Onboard-fire-control-panel maintenance consists of fault isolation to the lamp, switch, circuit card, and module level, and replacement of faulty lamps, switches, and modules.

Scheduled maintenance of the MOSS system by organizational activities is shown in table 4-4.

Onboard maintenance is not required for the dual tray, loading pole, and bridge assembly. These items should be checked out after they are loaded aboard and prior to deployment.

Digitized by Google

The MOSS system is offloaded from the submarine for 90-day maintenance at the end of each routine deployment cycle. The vehicle, launcher, dual tray, loading pole, and bridge are returned to the supporting IMA for routine postdeployment checkout, maintenance, and refurbishment. In addition, periodic load testing and certification of the following items are required every 48 months:

1. Launcher
2. Launcher cover assembly
3. Dual tray
4. 10-inch extension
5. 19-inch extension
6. Loading pole assembly
7. Tail nut adapter
8. Sling Mk 111 Mod 0
9. Sling, MOSS handling
10. Sling, endless loop

INTERMEDIATE LEVEL MAINTENANCE

Scheduled maintenance of the MOSS system at intermediate level maintenance activities consists of postrange turnaround, postdeployment maintenance, and complete turnaround using the procedures outlined in NAVSEA OP 4336. The load testing and certification of the components listed in the previous paragraph must be conducted as part of the intermediate level maintenance.

Following each sea run, MOSS vehicles must be returned to a shore-based IMA for complete turnaround. This includes afterbody preparation, system tests, and preparation for reissue.

Postdeployment maintenance must be conducted every 90 days. MOSS system components (vehicle, launcher, dual tray, bridge, and loading pole) are routinely maintained by the issuing IMA (tender or shore-based) following each offload and deployment cycle. Postdeployment maintenance includes inspection of the vehicle for exterior damage, verification of vehicle readiness, removal and refurbishment of the battery, and preparation of the vehicle for tactical or exercise deployment. The launcher, dual tray, bridge, and loading tray are inspected for corrosion and damage, functionally tested, and certain parts are lubricated during postdeployment maintenance.

MOSS vehicles must be returned to a designated shore-based IMA for complete turnaround after 1 year of fleet service. Additionally the MOSS vehicles must be returned if any of the following conditions should apply:

1. Exposure to flooded tube condition
2. Failure to meet inspection and/or test requirements
3. After 2 years of continuous storage without deployment

The Mk 391 Mod 0 fire control panel is used aboard tenders, at shore-based IMAs, and at the repair depot for turnaround maintenance and system checkout of MOSS vehicles. This portable panel consists of the Mk 348 Mod 1 fire control panel housed within an external case with accompanying cables and external power supply for portable maintenance use.

The Mk 572 Mod 0 test set (fig. 4-11) is a single cabinet, dual-purpose test set, designed as a MOSS system and FIR test set. This test set is used at shore-based IMAs and repair depot facilities. It is composed of standard test equipment and a pair of panels designed especially for the MOSS system and FIR module testing. The test set must be certified annually. The rack-mounted commercial test equipment must be removed and calibrated according to standard calibration procedures for each device.

The Mk 608 Mod 0 launcher test set is a single-purpose test set designed to cycle the launcher, test launcher circuits and valves, and test for launcher circuit continuity. The launcher test set is intended to be used at repair depots, shore-based IMAs, and aboard submarine tenders.

Replacement of Modules

The MOSS consists of 12 FIR modules assembled into a torpedo-shaped vehicle. The FIR concept, prevalent in torpedo design, entails arrangement of assemblies within the simulator so that module assembly and removal can be done quickly with standard hand tools.

If, during testing, abnormal results are attained, fault isolation procedures contained in NAVSEA OP 4336 should be followed to eliminate the abnormal condition. If, onboard a submarine tender, fault isolation procedures fail to satisfactorily eliminate an abnormal condition, the entire MOSS vehicle, along with a complete

Digitized by Google

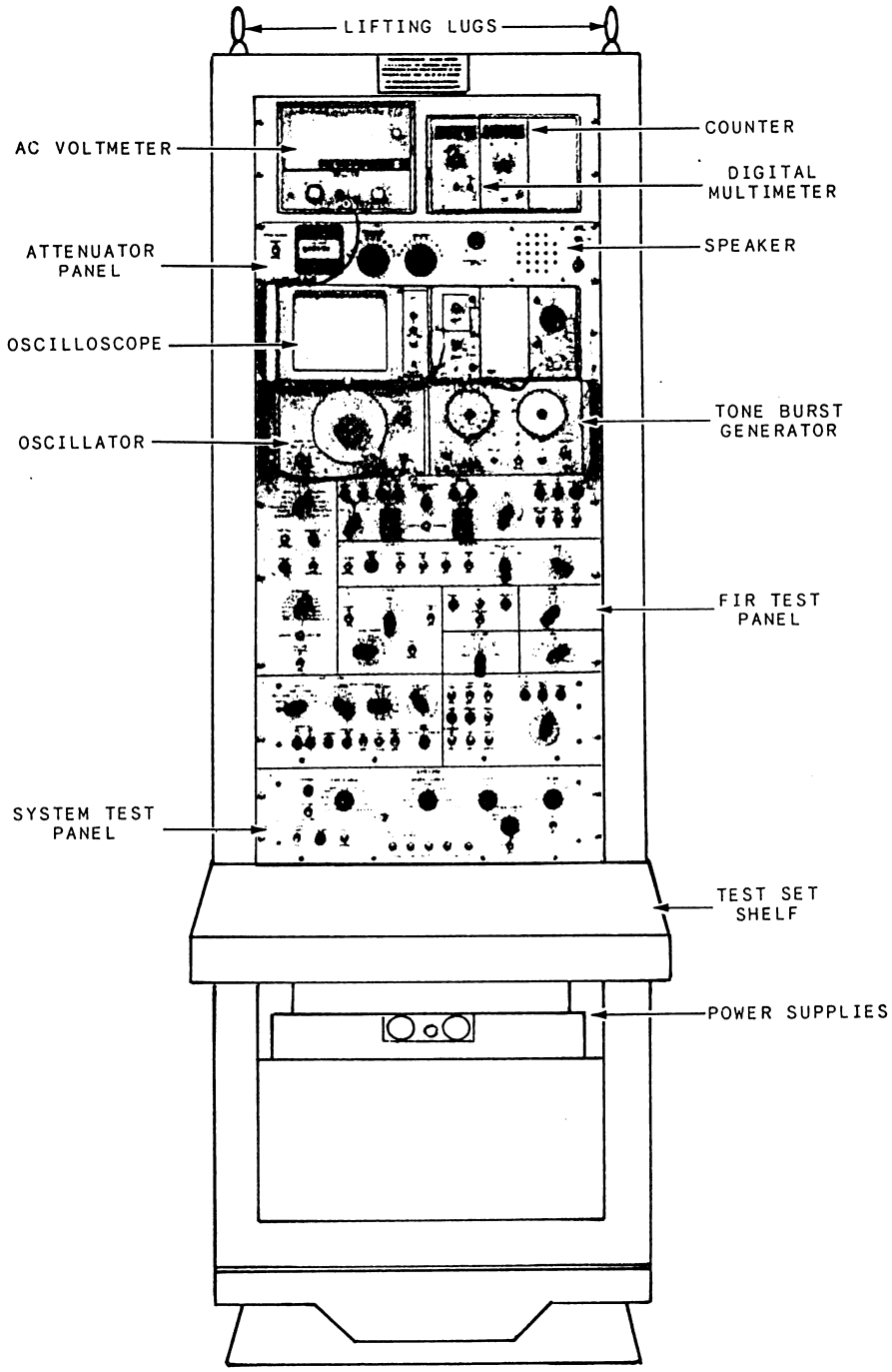

Figure 4-11.—Test Set Mk 572 Mod 0.

description of the failure symptoms, is returned to a shore-based IMA for detailed failure analysis, corrective action, and turnaround.

Throughout the conduct of fault isolation procedures contained in NAVSEA OP 4336, instructions to sequentially replace certain modules or parts are frequently used. Sequential replacement means that the following procedures are to be used.

1. Replace the first module or part on the list of items to be sequentially replaced with a new like item.
2. Restart the test at the last power-on step of the test.

Digitized by Google

3. If the originally failed test step is passed, stop and repeat the entire test.

4. If the test still fails, reinstall the module or part that was removed and replace the next module or part on the list of items to be sequentially replaced with a new like item.

5. Restart the test at the last power-on step. If the originally failed test step is passed, stop and repeat the entire test. If fault isolation procedures employed by a shore-based IMA fail to eliminate the problem, the complete MOSS vehicle assembly, along with a complete description of the failure symptoms, the sections of the fault isolation table that were followed, and the modules or parts replaced should be shipped to the MOSS depot repair activity.

DEPOT LEVEL MAINTENANCE

MOSS system components are returned to the designated depot repair activity as follows:

1. Vehicles—after 10 sea runs
2. Launchers—after 50 firings (total includes shop tests as well as at-sea launches)
3. All other components:
   a. After 5 years of service in IMA/fleet facilities
   b. Major item replacement or repair that cannot be accomplished at the IMA facility

The depot activity provides those services that cannot be routinely performed by the shore-based activities. These services include the following:

1. Major item and FIR repair
2. Static and dynamic seal replacement
3. Refurbishment of exterior/interior protective finish
4. Major item disassembly and replacement of parts

RECORDS AND REPORTS

Each vehicle and launcher is provided with an individual record book for recording maintenance actions, test data, and transfer and receipt information. The record book is maintained by the activities having custody of the hardware (vehicle and launcher). The record book must be forwarded with the equipment when it is transferred from activity to activity. Generally, the record book is packaged in watertight plastic bags and placed in the container with the unit. For a submarine loadout and offload, the record book is transferred by hand. When a vehicle is launched, the respective record book is forwarded to the issuing activity at the first opportunity.

The Torpedo Information Data form, is used by organizational and intermediate maintenance activities for MOSS system reports. At the organizational level, MOSS failures, maintenance actions, and RUDTORPE comments must be reported for the following equipment and publications:

1. MOSS Vehicle Mk 57
2. Launcher Mk 136
3. Fire Control Panel Mk 348
4. Dual Tray Mk 5
5. MOSS support/handling equipment, including loading pole and bridge assembly
6. NAVSEA OP 4336 (technical manual for MOSS Mk 70) and other documentation/procedures pertaining to items 1 through 5 above

A sample of a completed Torpedo Information Data form, being used to report a deficiency in the MOSS system is shown in figure 4-12. The REPORT TYPE block, block 3 is marked deficiency by the organizational maintenance activity.

The IMA may report failures, maintenance actions, configuration data, ORDALT, logistics actions, and informal RUDTORPE comments/recommendations using this form.

At IMAs, MOSS reporting is applicable to the following equipment/documentation items:

1. MOSS Vehicle Mk 57
2. Launcher Mk 136
3. Fire Control Panels Mk 348/391
4. Test Sets Mk 572/608
5. Dual Tray Mk 5
6. MOSS support/handling equipment including loading pole and bridge assembly
7. *Intermediate Maintenance Manual for FCP Mk 391*, NAVSEA SW 570-DO-MMI-010; NAVSEA OP 4336 (technical manual for MOSS Mk 70); NAVSEA SW 570-AO-MMI-010, *Tender Maintenance and Handling Manual for MOSS Mk 70)*, and other documentation/procedures pertaining to items 1 through 6 above.

Digitized by Google

TORPEDO MANAGEMENT INFORMATION SYSTEM
TORPEDO MAINTENANCE DATA FORM
(NAVSEA FORM 8510/5)

2. DOCUMENT NO

UNIT ID CODE (UIC)	ACTION JULIAN DATE	ACTION SFO NO
0 5 1 3 3 M	2 0 9 7	0 0 8 3

SECTION I – IDENTIFICATION

1. ACTIVITY/SHIP NAME/HULL NUMBER: USS GRAYLING SSN 646 — Mark 70

SECTION II – DESCRIPTION

3. REPORT TYPE
- (1) ☐ MAINTENANCE
- (2) ☒ DEFICIENCY
- (3) ☐ ORDALT/CHANGE
- (4) ☐ LOGISTIC
- (5) ☐ RUNTORPE
- (6) ☐ OTHER (SPECIFY)

4. EQUIPMENT REPORTED ON
- (1) ☐ WEAPON/VEHICLE
- (2) ☒ TEST/SUPPORT EQUIPMENT
- (3) ☐ DOCUMENTATION/PROCEDURES
- (4) ☐ SPARES
- (5) ☐ OTHER (SPECIFY)

5. TYPE OF ACTION
- (1) ☐ WARSHOT TURNAROUND/VERIFICATION
- (2) ☐ PREPARATION/CONVERSION
- (3) ☐ SPECIAL RETURN ACTIONS
- MK 46 ONLY — CLASS "A" ☐ "B" ☐
- (4) ☐ EXERCISE (POST FIRING) TURNAROUND
- IF EXERCISE TURNAROUND ACTION, ENTER FIRING DATA BELOW — UIC ____ JULIAN ____

6. DEFICIENCY FOUND DURING

WEAPON/VEHICLE
- (1) ☒ RECEIPT/DAMAGE INSPECTION
- (2) ☐ DISASSEMBLY INSPECTION
- (3) ☐ COMPONENT TURNAROUND
- (4) ☐ COMPONENT/FIR TEST
- (5) ☐ INITIAL ASSEMBLY
- (6) ☐ SYSTEM TEST
- (7) ☐ FINAL ASSEMBLY
- (8) ☐ RUN ANALYSIS
- (9) ☐ OTHER (SPECIFY)

TEST EQUIPMENT
- (1) ☐ CALIBRATION
- (2) ☐ WEAPON/VEHICLE TEST
- (3) ☐ SELF TEST
- (4) ☐ VISUAL INSPECTION
- (5) ☐ FIR TEST
- (6) ☐ OTHER (SPECIFY)

7. WEAPON/VEHICLE/EQUIPMENT I.D.	MK	MOD	REGISTER/SERIAL NO.	8. RUN NUMBER	S/R	9. TORPEDO NALC INCOMING	OUTGOING	10. MOD	11. NEXT SCHEDULED MAINTENANCE
									CLASS "A" ☐ "B" ☐ OSLE ☐

12. TEST EQUIP. ☐ USED ☐ DEFICIENT	MK	MOD	SER. NO	S/R	13. TEST DOC/PROCEDURE ☒ USED ☐ DEFICIENT	VOL	REV.	CHANGE	PARA/STEP
					OP 4336	1			

SECTION III – MATERIAL IDENTIFICATION/ACTION

14. ASSY/FIR ITEM/PART	DRAWING NUMBER AND REVISION	REFERENCE DESIGNATOR	SERIAL NUMBER	REPLACEMENT SERIAL NUMBER	15. ORDALT/CHANGE NO	16. R/I	17. S/R	18. F/D	19. AS/CU/TABLE	TEST TAPE AND REV	20. FILE CODE/TEST STEP	BLOCK
WARM CABLE	3167622	04W1	NSN			R	S		3-4			
WARM CABLE	3167622	04W1	NSN			I						

21. NARRATIVE (1) DESCRIPTION (2) SHOP ACTION (3) RECOMMENDATIONS

(1) WARM CABLE FOUND TO BE CRACKED AT CONNECTOR.
(2) WARM CABLE REPLACED.

22. REC'D FROM (UIC) ____
SHIP TO (UIC) 0 0 2 5 3

23. MANHOUR/MATERIAL EXPENDITURES

MANHOURS	MATERIAL COST
1/2	

24. REFERENCES/ENCLOSURES

25. NAME OF ORIGINATOR: TMI William Ferris Jr. USN

SUBMITTED DATE (JULIAN): 9 0 9 7

Figure 4-12.—Sample of a completed MOSS Deficiency Report.

Digitized by Google

- Maintenance Report. Routine preventive maintenance actions should be reported as follows:

  1. At the completion of an exercise vehicle turnaround by a shore-based IMA
  2. At the completion of a postdeployment tactical vehicle turnaround or launcher checkout by a tender or shore-based IMA
  3. At the completion of a rebuild/refurbishment/issue of any major MOSS hardware, including battery activation. Routine handling, visual inspections, exterior cleaning, and so forth, need not be reported; only nondeficiency maintenance resulting from normal use and handling must be reported as a maintenance report.

- ORDALT/Change Reports. These reports will include all ORDALT/Change installations performed on the MOSS vehicle and associated support, handling, and test equipment.

- Logistics Reports. These reports will include the receipt, issue, or transfer of a MOSS vehicle, or a MOSS component listed on the component identification sheets, or associated support, handling, and test equipment, or MOSS battery.

The component identification sheets from the Mk 57 MOSS record book are a major source of configuration information and means of tracking final assembly tests. They are used instead of requiring separate component listings and reportings. After a complete vehicle turnaround or major rebuild is performed, a copy of the component identification sheet from the record book must be submitted with the Torpedo Maintenance Data form.

Detailed instructions for completing the NAVSEA Form 8510/5 for MOSS system application by organizational maintenance activities are contained in technical document TW 510-AA-PRO-020/TMIS. At IMAs technical document TW 510-AA-PRO-030/TMIS applies.

SUMMARY

The ASROC, Harpoon, Tomahawk and the mobile submarine simulator (MOSS) with all of their complex systems require extensive maintenance. In order that this required maintenance be provided, maintenance has been organized into three levels— organizational, intermediate, and depot. Each level has its own defined maintenance tasks to be performed and its specific logistic support.

The technician's reporting responsibility and the various reports he used in his reporting were provided so that you could see examples of a Torpedo Maintenance Data form when used as a RUDTORPE, deficiency report or a combination report.

REFERENCES

ASROC Missile, SW180-AA-MMI-010/2963, Naval Sea Systems Command, Washington, D.C., 1990.

Encapsulated Harpoon, Maintenance and Stowage, SW820-AB-WHM-010, Naval Sea Systems Command, Washington, D.C., 1990.

Encapsulated Harpoon, SW820-AB-LOG-010, Naval Sea Systems Command, Washington, D.C., 1989.

Mobile Submarine Simulator Mk 70 Mod 0, SW570-AO-MMI-010, Naval Sea Systems Command, Washington, D.C., 1981.

Tomahawk Cruise Missile Logistics Support, SW820-AA-LOG-020/UGM-109-2, Naval Sea Systems Command, Washington, D.C., 1988.

Tomahawk Cruise Missile Maintenance, SW820-AA-MMO-010, Naval Sea Systems Command, Washington, D.C., 1987.

Torpedoman's Mate 1 & C, NAVEDTRA 10164-D, Naval Education and Training Program Development Center, Pensacola, Fla., 1984.

Torpedoman's Mate Third Class, NAVEDTRA 10168, Naval Education and Training Program Management Support Activity, Pensacola, Fla., 1989.

Digitized by Google

CHAPTER 5

MECHANICAL AND ELECTRICAL MAINTENANCE

OVERVIEW

Describe the safety requirements relating to mechanical and electrical maintenance.

Describe mechanical maintenance guidelines.

Describe maintenance requirements for surface vessel and submarine torpedo tubes.

Describe electrical maintenance guidelines.

OUTLINE

Safety

General maintenance

Mechanical maintenance

Surface vessel torpedo tube maintenance

Submarine torpedo tube maintenance

Electrical maintenance

Maintenance means everything you do to "keep'em firing." It means knowing your equipment and keeping it in shape to do its job. In this chapter we shall take up maintenance in terms of the specific work that you will be expected to do with torpedo tubes and test equipment. Your job is to have every torpedo tube ready to operate at all times and to keep every weapon in the fight.

In time of war, preventive maintenance saves more than time and repairs. You probably remember the poem that tells how, for want of a missing horseshoe nail, a battle was lost. The horse's shoes should have been inspected, and the missing nail replaced—just a matter of preventive maintenance. Of course, we do not use horseshoe nails aboard modern warships, but see the analogy. Maintenance can mean the difference between victory and defeat, both ashore and afloat. If anything goes wrong with the fighting equipment of a ship, it is out of action until repairs can be made, and then it might be too late. You have been around long enough to know that a ship's fighting equipment is very complicated with many parts dependent on other parts. A great deal of money and ingenuity have gone into that equipment. But if it is not in working order when needed, it is worthless.

We will begin our discussion by covering the safety aspects of mechanical and electrical maintenance. Then we will talk about hydraulic/mechanical maintenance and electrical maintenance. After we have covered the basics of these areas, we will apply what we have discussed to the surface and submarine torpedo tubes and the test equipment that you will be responsible for maintaining on a day-to-day basis.

SAFETY

The primary reason for the vast amount of information available on the subject of safety precautions is simply the desire to prevent accidents. Research shows that a majority of all accidents comes through sheer carelessness. Not only is there a loss of time involved in an accident, but also there is an accompanying loss of equipment, material, or, in an extreme case, life itself. Aside from these important considerations, there is a vast amount of money wasted in replacing damaged equipment, performing investigations, paying for hospitalization or funerals, and for loss of man-hours resulting in convalescence. These are but a few of the problems faced every day by the Navy because personnel fail to heed the posted and required safety precautions.

Safety is everybody's job. Awareness of danger, knowledge of how to avoid it, and

Digitized by Google

constant vigilance are the three basic requirements for the prevention of accidents while you are working on or operating ordnance equipment.

Practical safety features are incorporated into Navy equipment to eliminate potential hazards to personnel. Since familiarity with equipment leads to carelessness, observation of all safety notices and rules is mandatory. A relaxation of vigilance shall never be permitted.

Each piece of ordnance equipment has a specific list of safety precautions to be observed during operation and/or maintenance. Study these thoroughly before attempting to operate or repair this equipment.

Before we can start talking about actually performing any maintenance on torpedo tubes or test equipment, we will go over a few of the safety tips that you will see over and over again. But since it may mean the difference between life and death, here it is again.

MECHANICAL SAFETY

The mechanical maintenance you will perform is so wide ranging that there is no way we can cover every area of safety that you will need to know, but we will attempt to discuss some of the main areas that you will encounter. The first and possibly most used areas are the hydraulic and pneumatic systems.

Hydraulic\Pneumatic Safety

These are but a few of the safety rules that must be observed when operating or working on these systems.

- Never disconnect hydraulic lines or disassemble hydraulic equipment when the hydraulic system power motor is running.
- Never disconnect hydraulic lines or disassemble hydraulic equipment until the accumulators have been manually dumped to tank.
- Never manually actuate switches, solenoids, relays, or valves on hydraulic systems under pressure unless you are competent and qualified to perform these actions.
- Report hydraulic leaks immediately so that they may be repaired at the first opportunity.
- If clothing becomes drenched with hydraulic fluid, immediately change into dry clothing, for hydraulic fluid is injurious to your health when in prolonged contact with the skin. Additionally it is a fire hazard; because of this fact, spills should be immediately wiped up.
- Never spray hydraulic fluid, heat it to its flash point, or otherwise subject it to conditions that cause vaporization.
- Do not handle hydraulic fluid in the presence of electrical sparks or open flames.
- Do not mix air and hydraulic fluid in a pressurized system. An explosive mixture could result (commonly known as diesel-action).
- Never use oil on gauges associated with pneumatic systems. Do not use an oil gauge on an air system. Check the accuracy of gauges frequently as prescribed by maintenance requirement schedules.
- Do not close or open air or hydraulic valves rapidly unless authorized to do so.
- Before mating air and hydraulic system coupling, inspect the threads making certain they are free of dirt, oil, and physical defects.
- Do not direct a high-pressure air jet at any part of the human body; this may be fatal.
- All personnel taking part in and observing operation of power equipment shall remain alert, keep clear of moving parts, and be thoroughly familiar with the safety precautions applicable to that equipment. At no time will skylarking be tolerated.
- Hydraulic systems operate under hydraulic pressures ranging from approximately 100 psi to 3000 psi. Some pneumatic systems operate in approximately the same range of pressures as hydraulics. These pressures are dangerous and can be hazardous.

Safety precautions must be observed when performing maintenance, testing, and operating ordnance hydraulic and pneumatic equipment.

Digitized by Google

The high pressure liquid or air can cause major injuries to your face, hands, and other parts of the body by jets of air or liquid escaping from highly pressurized valves or pipe connections.

Tool Safety

There are a few basic rules that you should keep in mind when using wrenches:

- Always use a wrench that fits properly.
- Keep wrenches clean and free of oil. Otherwise, they may slip, resulting in possible injury or equipment damage.
- Do not increase the leverage of a wrench by placing a pipe over the handle. Increased leverage may damage the wrench or the work.
- Determine which way a nut should be turned before trying to loosen it; most nuts are turned counterclockwise for removal. This may seem obvious, but even experienced personnel have been observed straining with a wrench in the tightening direction when they wanted to loosen it.

The following precautions should be observed when using torque wrenches:

- Do not use the torque wrench as a hammer.
- When using the micrometer setting type, do not move the setting handle below the lowest torque setting. However, it should be placed at its lowest setting prior to being returned to storage.
- Do not use the torque wrench to apply greater amounts of torque than its rated capacity.
- Do not use the torque wrench to break loose bolts which have been previously tightened.
- Never store a torque wrench in a toolbox or in an area where it may be damaged.

Be thoroughly familiar with all posted safety precautions and those listed in the OP pertaining to the equipment to which you are assigned.

Do not think that once you have learned all applicable safety precautions you can sit back and take things easy. Review the precautions periodically, particularly those for jobs seldom performed. Try to improve upon any rules in effect. Safety is everyone's responsibility, not just those who drew up the regulations. Most accidents are caused by personnel who are so familiar with their job that they think they can take shortcuts; by personnel who do not know the applicable precautions; by practical jokers; or in the majority of instances, by personnel exercising plain carelessness.

ELECTRICAL SAFETY

You will install, maintain, and repair electrical and electronic equipment in confined spaces in which dangerously high voltages are present. Among the hazards of this work is the possibility of injury caused by electric shock, electrical fires, harmful gases, and the improper use of tools.

Because of these dangers, you should develop safe and intelligent work habits. You should always be on the lookout for dangerous conditions and avoid unsafe acts. You must also know the authorized methods for dealing with fires of an electrical origin. You must know how to treat burns and how to give artificial ventilation (respiration) to persons suffering from electric shock. In some cases, you may have to perform external heart compression in addition to artificial ventilation to restore the heartbeat. (Artificial ventilation and external heart compression performed together is known as cardiopulmonary resuscitation [CPR].)

The life of a shipmate may easily depend upon your CPR skills. This statement is not meant to indicate that knowledge of other first-aid procedures are less important; rather, it is meant to alert you of the importance of being currently certified in the special skills of CPR in order to take immediate, correct, and successful actions in the event of heart stoppage and/or breathing stoppage.

Electric Shock

Electric shock may cause burns of varying degree, the stoppage of breathing and unconsciousness, ventricular fibrillation or cardiac arrest, and death.

Digitized by Google

If a 60-hertz alternating current is passed through a person from hand to hand or from hand to foot, the effects when current is gradually increased from zero are as follows:

- At approximately 1 milliampere (0.001 ampere), the shock will be felt.
- At approximately 10 milliamperes (0.01 ampere), the shock is severe enough to paralyze muscles and a person may be unable to release the conductor.
- At approximately 100 milliamperes (0.1 ampere), the shock is usually fatal if it lasts for one second or more. **Remember that current, rather than voltage, is the fundamental cause of shock intensity.**

You should clearly understand that the resistance of your body will vary. That is, if the skin is dry and unbroken, body resistance will be quite high—300,000 to 500,000 ohms. However, if the skin becomes moist or broken, body resistance may drop to as low as 300 ohms. Thus, a potential as low as 30 volts could cause a fatal current flow. Therefore, any circuit with a potential in excess of this value must be considered dangerous.

Electric shock is caused by contact with an electric circuit. The victim usually experiences a jarring, shaking sensation or the sensation of a sudden blow. If the voltage is sufficiently high, unconsciousness results. Severe burns may appear on the skin at the place of contact.

Shock causes muscle spasms, which results in a person clasping the tool or wire that caused the shock and rendering him unable to turn it loose. Electric shock can kill its victim by stopping the victim's heart or his breathing. It may damage nerve tissue, which may result in a wasting away of muscle. This damage may not become apparent until several weeks or months after the shock is received.

The following procedure is recommended for rescue and care of shock victims:

1. Remove the victim from the electrical contact at once, being careful not to endanger yourself; you can do this by (a) de-energizing the primary power switch if it is nearby or (b) using a dry stick, rope, leather belt, coat, blanket, or any other nonconductor of electricity to pull the victim away from the electrical contact.

2. Determine whether the victim is breathing. If so, keep the person lying down in a comfortable position. Loosen the clothing about his neck, chest, and abdomen so that the person can breathe freely. Take precautions to protect the victim from exposure to the cold, and maintain a watch of the victim's behavior.

3. Keep the victim from moving about. After shock, the heart is very weak, and any sudden muscular effort or activity may result in heart failure.

4. Do not give the victim stimulants or depressants. Send for a medical officer at once and do not leave him until adequate medical care is given.

5. If the victim is not breathing, you must apply artificial ventilation without delay, even though the victim may appear to be lifeless.

Working on Energized Circuits

Insofar as is practical, you should not undertake repair work on energized circuits and equipment. However, it could become necessary, such as when you make adjustments on operating equipment. In such cases, obtain permission from your supervisor, then proceed with your work, and carefully observe the following safety precautions:

- Have adequate lighting to safely and properly perform the job.
- Insulate yourself from the ground by an approved rubber mat or layers of dry canvas and/or wood.
- Where practical, use only one hand, keeping the other either behind you or in your pocket.
- Wear rubber gloves, if you expect voltage to exceed 150 volts.
- Station an assistant near the main switch or circuit breaker so the equipment can be immediately de-energized in case of an emergency.
- Station someone that is qualified in first aid for electric shock in the proximity during the entire operation.
- DO NOT WORK ALONE.

Digitized by Google

- DO NOT work on any type of electrical apparatus when you are wearing wet clothing or if your hands are wet.
- DO NOT wear loose or flapping clothing.
- DO NOT wear thin-soled shoes and shoes with metal plates.
- Flammable articles should not be worn, such as celluloid cap visors.
- Remove all rings, wristwatches, bracelets, and similar metal items before working on equipment. Also ensure that your clothing does not contain exposed metal fasteners, such as zippers, snaps, buttons, and pins.
- DO NOT tamper with interlock switches; that is, do not defeat their purpose by shorting them or blocking them open.
- Ensure that equipment is properly grounded before energizing.
- De-energize equipment before attaching alligator clips to any circuit.
- Check for the presence of voltage only with approved meters and other indicating devices.

Working On De-Energized Circuits

When any electronic equipment is to be repaired or overhauled, certain general safety precautions should be observed. They are as follows:

1. Remember that electrical and electronic circuits often have more than one source of power; take the time to study the schematics or wiring diagrams of the entire system to ensure that all sources of power have been disconnected.
2. If pertinent, inform the remote station regarding the circuit on which work will be performed.
3. Use one hand when turning switches on or off.
4. Safety devices, such as interlocks, overload relays, and fuses, should never be altered or disconnected except for replacement. In addition, they should never be changed or modified in any way without specific authorization.
5. Fuses should be removed and replaced only after the circuit has been de-energized. When a fuse blows, the replacement should be of the same type and have the same current and voltage ratings. A fuse puller should be used to remove and replace cartridge fuses.
6. All circuit breakers and switches from which power could possibly be supplied should be secured (locked if possible) in the OPEN or OFF (safe) position and tagged.
7. After the work has been completed, the tag (or tags) should be removed only by the person(s) who signed it when the work began.
8. Keep clothing, hands, and feet dry if at all possible. When you must work in wet or damp locations, place a rubber mat or other non-conductive material on top of a dry, wooden platform or stool to sit and stand on. Use insulated tools and insulated flashlights of the molded type when you are required to work on exposed parts.

Electrical Fires

No one will argue with the statement that fires are a hazard. They are such a hazard that we have classified them: A, B, and C. Class A fires involve wood, paper, cotton and wool fabrics, rubbish, and the like. Class B fires involve oil, grease, gasoline and aircraft fuels, paints, and oil-soaked materials, and class C fires involve insulation and other combustible materials in electrical and electronic equipment.

Electrical or electronic equipment fires result from overheating, short circuits (parts failure), friction (static electricity), or radio-frequency arcs. Also, equipment may be ignited by exposure to nearby class A or B fires. Since class C fires involve electrical circuits, electric shock is an added hazardous condition. Thus, whenever possible, any electrical equipments exposed to a class A or class B fire, or actually ignited by such a fire, should be de-energized immediately. If the equipment cannot be de-energized completely, you must use protective measures to guard against electric shock. In addition, extinguishing agents other than gases will contaminate delicate instruments, contacts, and similar electric devices. Therefore, carbon dioxide (CO_2) is the preferred extinguishing agent for electrical fires because it does not conduct electricity and it rapidly evaporates, leaving little or no residue. Thus, its use reduces the possibility of electric shock to personnel and damage to delicate equipment as a result of contamination.

Digitized by Google

A dry chemical type of extinguishing agent, composed chiefly of potassium carbonate (Purple-K), is suitable for electrical fires because it is a non-conductor and provides protection against electric shock. However, damage to electrical or electronic parts may result from the use of this agent. The dry chemical extinguisher is similar in appearance to the CO_2 extinguisher.

A solid stream of water must never be used to extinguish electrical fires in energized equipment. Water usually contains minerals that make it conductive; the conductivity of sea water is many times greater than that of fresh water. Pure distilled water is not a good electrical conductor and, therefore, may be used in an emergency on small electrical fires. If circumstances demand the use of fresh water or seawater, fog produced by a special hose nozzle (fog head or tip) may be used in electrical or electronic equipment spaces. The fog, which is a fine diffusion or mist of water particles, has very little conductivity.

Foam is not recommended for electrical fires because of equipment damage and possible shock hazard to personnel; however, if necessary, foam may be used only on de-energized circuits. When a blanket of foam is applied to a burning substance, the foam smothers the fire; that is, it cuts off the air supply to the burning substance. Thus, the supply of oxygen necessary to support combustion is isolated from the substance, and the fire will be extinguished.

The following general procedure is used for fighting an electrical fire:

1. Promptly de-energize the circuit or equipment affected.
2. Sound an alarm in accordance with station regulations or the ship's fire bill. When ashore, notify the fire department; if afloat, notify the officer of the deck. Give the fire location and state what is burning. If possible, report the extent of the fire; that is, what its effects are upon the surrounding area.
3. Secure ventilation by closing compartment air vents or windows.
4. Control or extinguish the fire using a CO_2 fire extinguisher.
5. Avoid prolonged exposure to high concentrations of carbon dioxide in confined spaces. The danger of suffocation exists in confined spaces unless special breathing apparatus is available.

Even under normal conditions, fire aboard a Navy vessel at sea can cause more fatalities and injuries to personnel and damage to the ship than those resulting from battle. To know and understand the dangers of fire is extremely important for all personnel.

GENERAL MAINTENANCE

Back home you may have kept your old jalopy running by puttering with it in all your spare time and learning from your mistakes. You have seen enough torpedo tubes and test equipment with their complex and powerful but sensitive machinery to know that modern weapons require special skill to maintain. Mistakes can be too costly in personnel and money to take a chance. You cannot just turn loose eager beavers with screwdrivers and leave it to their ingenuity to do a maintenance job.

Some maintenance jobs must be done more often than others. The Navy uses maintenance requirement cards (MRCs) (fig. 5-1), in the Planned Maintenance System (PMS) to make sure that routine maintenance jobs are done at the required regular intervals (weekly, daily, monthly, etc.) and that no steps are forgotten.

You will obtain the MRCs from your work center supervisor. The MRCs will then become a guide when doing the work. These MRC's specify all the routine maintenance jobs that are required for a given torpedo or piece of test equipment, leaving as little as possible to the imagination. The individual maintenance items for tasks are classified by frequency—how often they are to be done.

Daily maintenance is concerned mostly with lubrication and inspection. On a torpedo this might be a visual inspection for Otto Fuel II leaks and on the torpedo tube it might be checking the sight glass for any evidence of leakage. To do the lubricating, you must have the lubrication chart (there may be several) for that piece of equipment.

PREVENTIVE MAINTENANCE

There are two main classes of maintenance work. The most important, which accounts for most of the maintenance work you do, is preventive maintenance. The purpose of preventive maintenance is not so much to repair troubles and malfunctions as they arise, but to prevent them before they appear. Preventive maintenance is based on the well-known principle that an ounce of prevention in the form of adequate routine maintenance is worth a pound of cure in the form of repair.

Digitized by Google

SHIP SYSTEM	SUBSYSTEM	MRC CODE
		SO-13 W-3
SYSTEM	EQUIPMENT	RATES / M/H
	AN/SQS-23D,E,F,G Sonar Detecting-Ranging Set	STG3 0.4 STGSN 0.4
		TOTAL M/H 0.8 ELAPSED TIME 0.4

MAINTENANCE REQUIREMENT DESCRIPTION

1. Clean and inspect record/reproduce heads and vacuum pads of performance monitor equipment (PME).
2. Demagnetize the record/reproduce heads.
3. Test operate PME.

SAFETY PRECAUTIONS

1. Forces afloat comply with Navy Safety Precautions for Forces Afloat, OPNAVINST 5100 series.

TOOLS, PARTS, MATERIALS, TEST EQUIPMENT

MATERIALS
1. [1608] Brush, paint, sash and trim
2. [0063] Applicator, disposable, cotton tip, wood
3. Tape, blank PME

MISCELLANEOUS
1. [2360] Cleaner, magnetic tape head

NOTE: Numbers in brackets can be referenced to Standard PMS Materials Identification Guide (SPMIG) for stock number identification.

PROCEDURE

Preliminary
a. Turn PME POWER on.
b. Remove recording tape from PME.
c. Turn PME POWER off.

1. Clean and Inspect Record/Reproduce Heads and Vacuum Pads of Performance Monitor Equipment (PME).
   a. Moisten cotton swab with head cleaner.
   b. Wipe record/reproduce heads with moistened swab.
   c. Clean record/reproduce heads with dry swab.
   d. Brush vacuum pads with stiff-bristle brush.
   e. Inspect main capstan record/reproduce heads for scratches.
   f. Inspect metering wheel for concentric rotation.
2. Demagnetize the Record/Reproduce Heads.
   a. Plug head demagnetizer into AC outlet.
   b. Place demagnetizer tips lightly in contact with record/reproduce head, with prongs straddling the center ridge of head.
   c. Slowly move demagnetizer back and forth four times.

PAGE 1 OF 2

43

BBV7

LOCATION	DATE April 1991	N

MAINTENANCE REQUIREMENT CARD (MRC)
OPNAV 4790/82 (REV 2-82)

Figure 5-1.—Maintenance Requirement Card.

Preventive maintenance is not dramatic or exciting. There is no glamour in a grease gun, but taking a little trouble and time to do the preventive routine maintenance now will save a lot of trouble and time later by heading off breakdowns and time-consuming repairs.

Your preventive maintenance work may be very much like that of a coach who is assigned to keeping a team of highly trained athletes in top fighting form. For both TMs and machines, it is daily attention to details that is important. For machines, these details are things like inspection, lubrication, and tighteningand adjusting of parts. To let any of those things go means trouble, just as there is trouble for an athlete who decides to break training.

CORRECTIVE MAINTENANCE

In spite of the best preventive maintenance, sometimes your equipment will malfunction or break down altogether. Then it will need corrective maintenance—the urgent repair or overhaul work required to get it into working order. Effective routine maintenance will keep this kind of work to a minimum, but

Digitized by Google

there are times in battle when you must expect casualties and breakdowns and must be prepared to deal with them.

The more you know about how your equipment works, the better you will troubleshoot and repair it. Experience is a great teacher, but you cannot wait until your torpedo or test equipment breaks down in battle to find out how to repair it. Studying the troubleshooting methods and repair techniques will give you the background you need to combine with practice to make you an efficient repairman.

MECHANICAL MAINTENANCE

The area that you will be doing most of your mechanical maintenance will be the torpedo tubes. So, let's discuss the maintenance for the torpedo tubes located on both submarines and surface vessels.

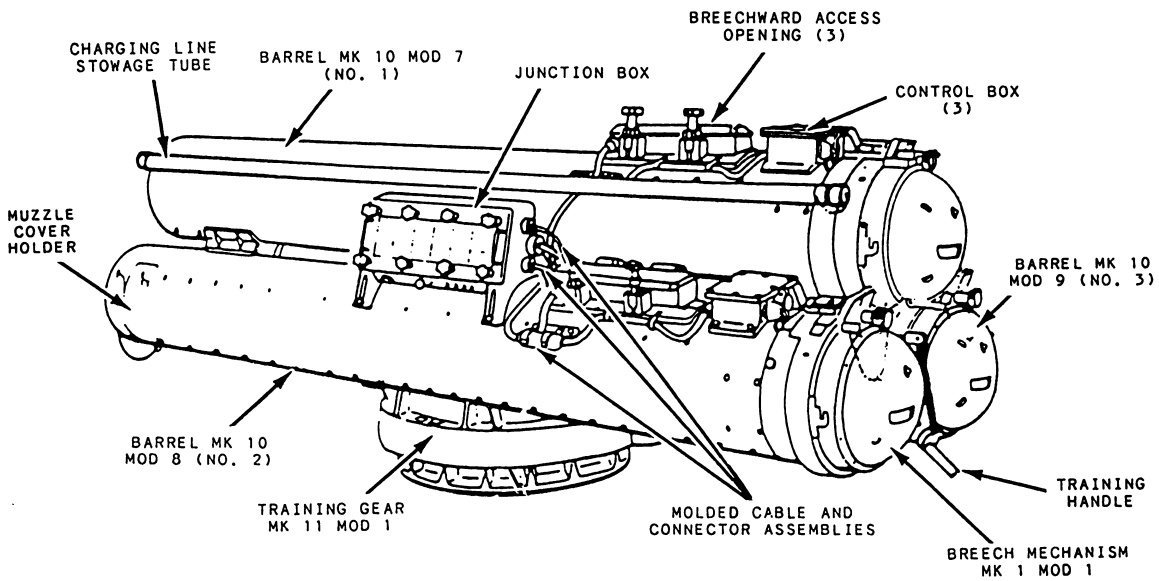

SVTT MK 32 MOD 5 AND 7 STARBOARD MOUNT

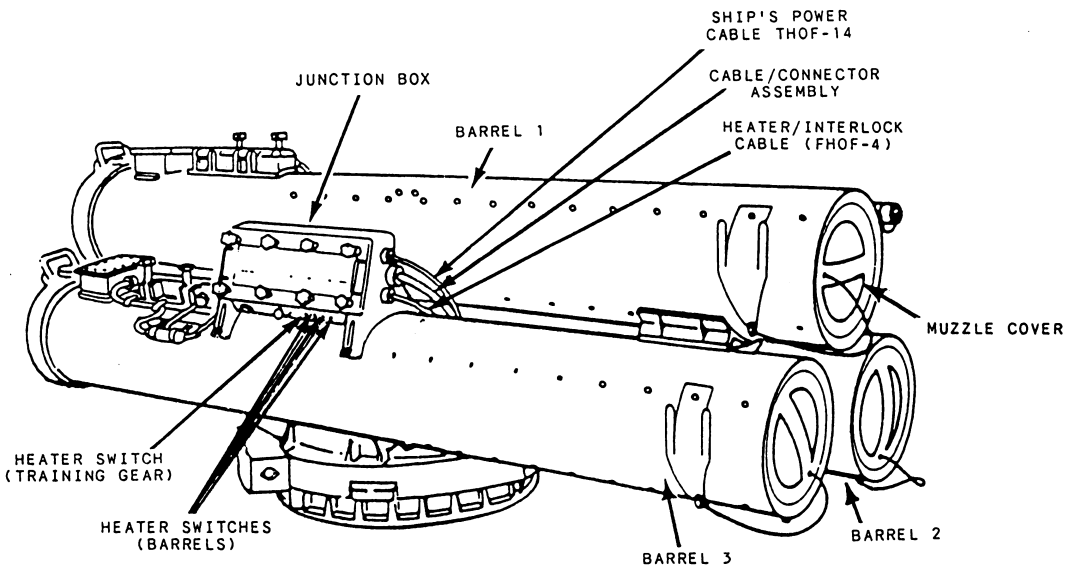

SVTT MK 32 MOD 5 AND 7 PORT MOUNT

Figure 5-2.—Surface Vessel Torpedo Tube Mk 32 Mods 5 and 7.

Digitized by Google

TORPEDO TUBE MAINTENANCE

Various weapons will come and go, but the one system that will remain is the torpedo tubes. If they do not operate properly, no matter how high tech your weapons are, they will be rendered useless. Therefore, the most important piece of equipment that you will be responsible for maintaining is the torpedo tubes.

Now, that we know the difference between preventive and corrective maintenance, why don't we apply it to the surface torpedo tubes.

Surface Vessel Torpedo Tube Maintenance

Surface vessel torpedo tubes are either the trainable type or the fixed (stationary) type. The maintenance of the different types are basically the same. The Mk 32 Mods 5 and 7 (fig. 5-2), 14 (fig. 5-3), and 15 are trainable and the Mk 32 Mod 9 (fig. 5-4) is fixed.

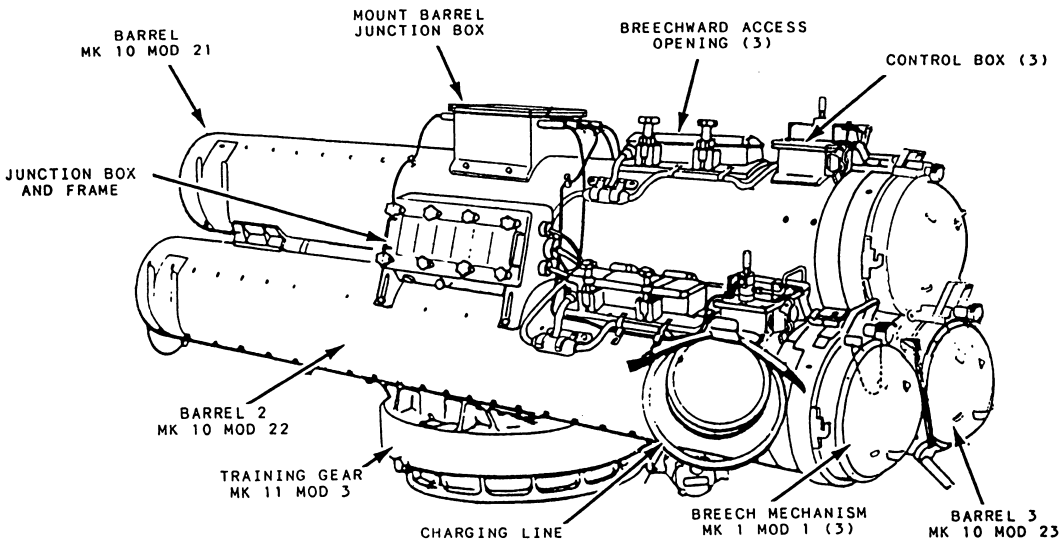

TORPEDO TUBE MK 32 MOD 14, STARBOARD CONFIGURATION, LEFT SIDE

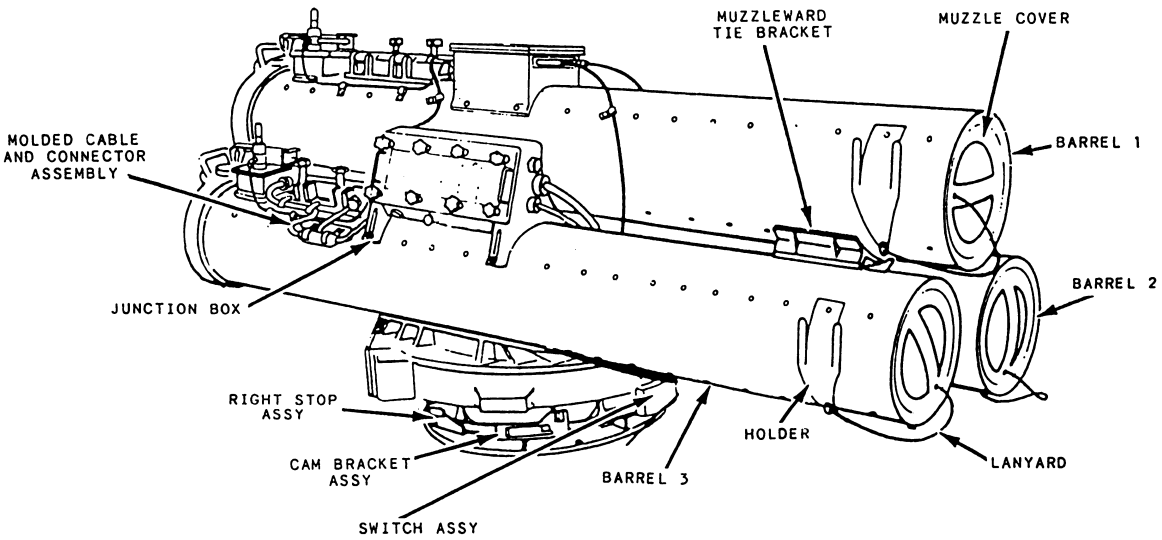

TORPEDO TUBE MK 32 MOD 14, PORT CONFIGURATION, RIGHT SIDE

Figure 5-3.—Surface Vessel Torpedo Tube Mk 32 Mods 14 and 15.

Digitized by Google

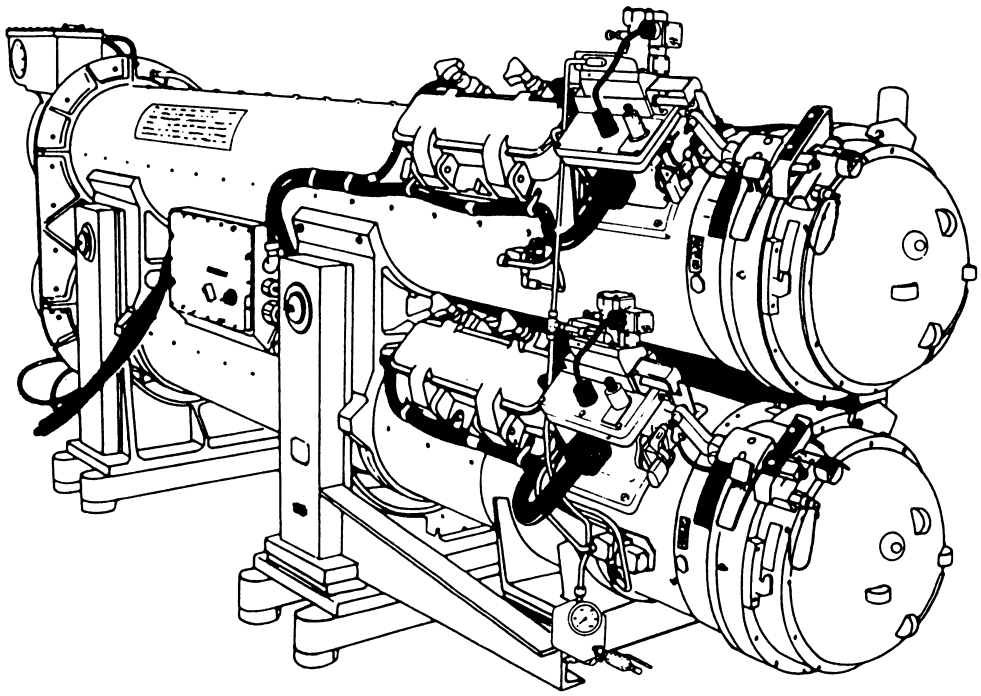

Figure 5-4.—Surface Vessel Torpedo Tube Mk 32 Mod 9.

What we need to do now is introduce you to some of the consumables and special tools required to perform maintenance on surface vessel torpedo tubes.

Table 5-1 list consumables which are items such as lubrication supplies, and gaskets. Table 5-2 list those items needed in addition to normally supplied tools.

Before you start to work on any surface vessel torpedo tube perform the following procedures:

1. Shut down all power to the tube and tag applicable switches.
2. Remove the muzzle cover.
3. Bleed the air pressure from the breech mechanism and remove it from the barrel.
4. Remove the securing mechanisms.
5. If the barrel is loaded, train the tube to the unloading position and unload the torpedo.

As we discussed earlier in this chapter, preventive maintenance consist of periodic inspection, cleaning, lubrication and operational testing of the torpedo tube. Since preventive maintenance is accomplished in accordance with PMS, and the procedures outlined on the applicable MRCs, we will not attempt to go into specific maintenance requirements.

What we will do is to introduce you to some of the corrective maintenance that will be required from time to time.

The purpose of corrective maintenance on surface torpedo tubes is to correct existing or probable system or component malfunctions, including maintenance of records and spare parts. Corrective maintenance consists of trouble-shooting for fault isolation and replacement of components.

You should observe the following general procedures when preparing tubes for fault isolation, component tests, and corrective maintenance:

1. Keep all parts clean and free from all foreign matter.
2. Protect all working surfaces from damage.
3. Cover all openings in pneumatic systems with heavy paper or tape to prevent the entrance of foreign material.
4. Handle all gaskets and seals with care; discard all those that are damaged or worn.
5. Check that all vent and bleed openings are free of obstruction.
6. Coat threads with antiseize compound, unless otherwise specified.
7. Lubricate o-rings lightly with grease.
8. Clean disassembled parts and mating surfaces with cleaning solvent.

Digitized by Google

Table 5-1.—Consumables

ITEM	NOMENCLATURE	IDENTIFICATION
1	General Purpose Grease	MIL-G-81322
2	Leak Detection Compound, Oxygen Systems, Type 1	MIL-L-25567
3	Antiseize Compound	MIL-T-22361
4	Pneumatic Grease	MIL-G-4343
5	Gun-Slushing Compound	MIL-C-18487
6	Cleaning Solvent	P-D-680
7	Preformed Packing	MS-28778-20
8	Safety Wire	MS20995C41
9	O-ring	AN-6227-15
10	O-ring	AN-6227-4
11	O-ring	MS28775-010
12	Preformed Packing	MS28778-4
13	Masking Tape	PPP-T-42C
14	Pretreatment Primer	MIL-C-15328
15	Clear Yellow Primer	TT-P-1757 CLR Y
16	Haze Gray Enamel	TT-E-490 CLR 26270
17	Insulating Varnish	MIL-V-1137
18	Filter	1404007
19	Nylon Washer	1621223
20	O-ring	MS28778-4
21	O-ring	MS28778-10
22	O-ring	AN6227-14
23	O-ring	AN6227-7
24	O-ring	AN6227-11
25	Epoxy Adhesive	EC1838A & B
26	Aluminum Oxide Abrasive Cloth	P-C-451
a.	Type I, Class 1, Grit No. 100	
b.	Type I, Class 1, Grit No. 80	
c.	Type I, Class 1, Grit No. 40	
27	Flint Abrasive Paper Class 2, Medium Grit	P-P-105
28	Deleted by Change B	
29	Methyl Ethyl Ketone	TT-M-261
30	Acetone	O-A-51
31	Cleaning Solvent	MIL-C-18718
32	Adhesive	MMM-A-121
33	Oil, General Purpose	MIL-L-17672
34	Rust Preventive Compound	MIL-C-16173 GRII
35	Isopropyl Alcohol	TT-I-735 Type A
36	Adhesive, Sealant, RTV	MIL-A-46106 Type 1
37	Seal, Static Pressure	5758483
38	Adapter, wire size 14-16 to 18-20	2844113
39	Crimp Splice	M7928/3-3

Digitized by Google

Table 5-2.—Special Tools and Equipment

NOMENCLATURE	IDENTIFICATION NO.
1. Multimeter	AN/PSM-4
2. Megger	AN/PSM-2
3. Heat Gun	1473467
4. Regulator	87-1500-580
5. *Firing Valve Removal Tool	3015012
6. Grease Gun	MIL-G-1330-72
7. Soldering Gun	41G1865-450
8. Inserting/Extraction Tool	MIL-1-81969/14A-03
9. Bar, Thermoswitch Removal	3245016
10. Oiler, Hand	MS15764-1
11. Nipple, Quick Connect	1404077
12. Applicator - 5 Ft Tubing with 1/4 or 1/8 NPT End Pitting to Suit Standard CO^2 Bottle	
13. *Power Unit, Hydraulic	1623864
14. Test Set Mk 432 Mod 2 (used in conjunction with applicable fire control system MRCs)	
15. Pressure Beam	
*Indicates items available on tenders	

During fault isolation, you, the technician will use specified test procedures to determine the area of the malfunction. Table 5-3 is a example of what a fault isolation chart will look like. These charts can be used in analyzing major malfunctions. To avoid any unnecessary disassembling, you should perform a systematic analysis of the malfunction to determine the specific cause and take corrective action as required. Refer to disassembly or repair procedures as applicable.

Fault isolation and corrective repair procedures are listed in applicable technical manuals. Technical manual SW395-AC-MMO-010/OP 3355 applies to the Mk 32 Mods 5 and 7 surface vessel torpedo tubes, technical manual SW395-AD-MMO-010/Mk 32 Mod 9 applies to the Mk 32 Mod 9 surface vessel torpedo tubes, and technical manual SW395-AE-MMO-010 applies to the Mk 32 Mod 14 surface vessel torpedo tubes.

To ensure system integrity after corrective maintenance, you should do general maintenance and/or conduct operational tests. Refer to the applicable maintenance index page (MIP) for a listing of the different procedures.

Your job, as a maintenance person, would not usually require you to completely disassemble or reassemble the torpedo tube. Though some jobs are more complex than others. For example, either replacement or repair procedures, or both, for a SAFE/READY solenoid valve or a SQUID FIRE switch are not routine maintenance. However, replacement of most gauges are relatively routine. To give you an idea of what is involved in this type of maintenance, let's discuss these two evolutions.

Let's start with the replacement of the SAFE/READY solenoid. Before beginning any job, you must always perform the general procedures that we discussed earlier: shutting down power, removing muzzle covers, bleeding down air flask, removing securing mechanisms and unloading torpedo tubes if loaded. After removing the cover of the control box, ensure that no voltage exist. Disconnect the switch lead and cut it from the pressure switch close to the splice and remove the switch. Verify that you have the correct replacement switch, lubricate it with the applicable grease, and install a new o-ring. Then install the new switch verifying operation with the

Digitized by Google

Table 5-3.—Fault Isolation

SYMPTOM	PROBABLE CAUSE	TEST/REMEDY
No BARREL READY indication at Fire Control	Lever of control valve operating mechanism in muzzleward (STANDBY) condition	Shift lever to breechward position.
	Flask pressure below minimum 1275 psig	Recharge or see Symptom Breech Mechanism leak.
	Defective Pressure Switch S109	Perform continuity check, refer to electrical schematic, and replace.
	Defective READY LIGHT Switch S101	Perform continuity check, refer to electrical schematic, and replace.
	Defective Sector Clear Switch S106	Perform continuity check, refer to electrical schematic, and replace.
	Defective wiring in ready circuitry	Check Barrel Ready circuit, refer to ship functional and electrical schematic, and repair.
Barrel in READY condition fails to fire electrically but will fire manually	Defective electrical firing circuit	Check firing signal from fire control, refer to ship functional and electrical schematic, and repair.
		Check firing circuit, refer to electrical schematic, and repair.
	Defective solenoid valve	Perform continuity check, refer to electrical schematic, and replace.
Barrel in READY condition but fails to fire electrically or manually	Defective control valve causing a drop in pressure	Check for leakage. Replace or repair defective valve.
	Flexible hose not connected	Connect flexible hose.
	Defective securing mechanism	Perform applicable MRC(s). Replace or repair defective units.
	Defective solenoid valve	Perform applicable MRC(s). Replace or repair defective valve.
	Defective plug puller mechanism	Perform applicable MRC(s). Replace or repair defective units.
	Air lines clogged	Disconnect air line and blow clean.

Digitized by Google

Table 5-3.—Fault Isolation—Continued

SYMPTOM	PROBABLE CAUSE	TEST/REMEDY
Barrel fires prematurely when lever of control valve operating mechanism is moved breechward without an electrical fire signal or manual fire actuation	Solenoid valve open, possible defective, or electrical defect causing solenoid to be energized	Perform applicable MRC(s). Check electrical circuitry, refer to ship function and electrical schematic. Replace or repair defective solenoid.
Barrel Heater Failure	Defective wiring	Perform applicable MRC(s). Replace or repair defective component.
	Defective Heater Switch S110, S111, or S112	
	Defective Thermoswitch S102 or S103	
	Defective heater element	
Training Gear Heater Failure	Defective wiring	Perform applicable MRC(s). Replace or repair defective component.
	Defective Heater Switch S104	
	Defective Thermoswitch S107	
	Defective heater element	
High Temperature Alarm and Supervisory Circuit Failure	Defective wiring	Perform applicable MRC(s).
	Defective Thermoswitch S113 or S114	
	Defective coil in Barrel Heater Relay K1	
Breech Mechanism and Pneumatic System Leak		Perform applicable MRC(s).
a. Leaking Pilot Tube	Defective O-rings in control valve	Replace or repair control valve.
b. Leaking Firing Valve	Defective O-rings	Replace O-rings.
c. Leaking Charging Nipple	Broken valve spring, defective valve seat, or defective internal O-ring	Replace or repair charging nipple.
d. Leaking around body of Charging Nipple	Defective gasket	Replace gasket.

Digitized by Google

use of an ohmmeter. Reinstall the control box cover, and perform the applicable MRCs and return the equipment to normal condition.

The other example we will discuss is the replacement of the emergency squib fire switch. Again, you must perform the general procedures described in our last paragraph. First, remove the cover to the control box and disconnect the switch lead at the terminal board. Then, remove the old switch and install the new one on the bracket. With the lever in the secured position, adjust the position of the switch so that .010 of an inch clearance exists between the end of the switch plunger and the terminal board. After reinstalling the control box cover, perform the applicable MRCs and return the equipment to normal condition.

These checks are only two of many that are performed on a continuous basis. For more information on the checks and requirements for the surface vessel torpedo tubes, review your MRCs in the work center.

Now, let's briefly talk about submarine torpedo tube maintenance.

Submarine Torpedo Tube Maintenance

Submarine torpedo tubes vary depending on the type and class of submarine. The major differences lie in the physical mounting arrangement. Because we will not be addressing this subject at any great depth, the maintenance will be similar for all of the different Mks and Mods of torpedo tubes. The submarine torpedo tubes we will summarize are the Mk 63 (fig. 5-5), Mk 65 (fig. 5-6), Mk 67 (fig. 5-7), and Mk 68 (fig. 5-8).

As with the surface torpedo tubes, the submarine torpedo tube preventive maintenance is accomplished in accordance with PMS, and the procedures are outlined on the applicable MRCs, so we will not attempt to go into specific maintenance requirements.

Instead, let's discuss the major types of preventive maintenance that you as a Torpedoman will do on an almost daily basis: inspecting and cleaning, and lubrication.

You must inspect and exercise working parts at every opportunity to detect and correct possible causes of failure. Examine the stop mechanism and interlocks for deformation and lost motion and check that they operate properly. Electrolytic action can occur when dissimilar metals are

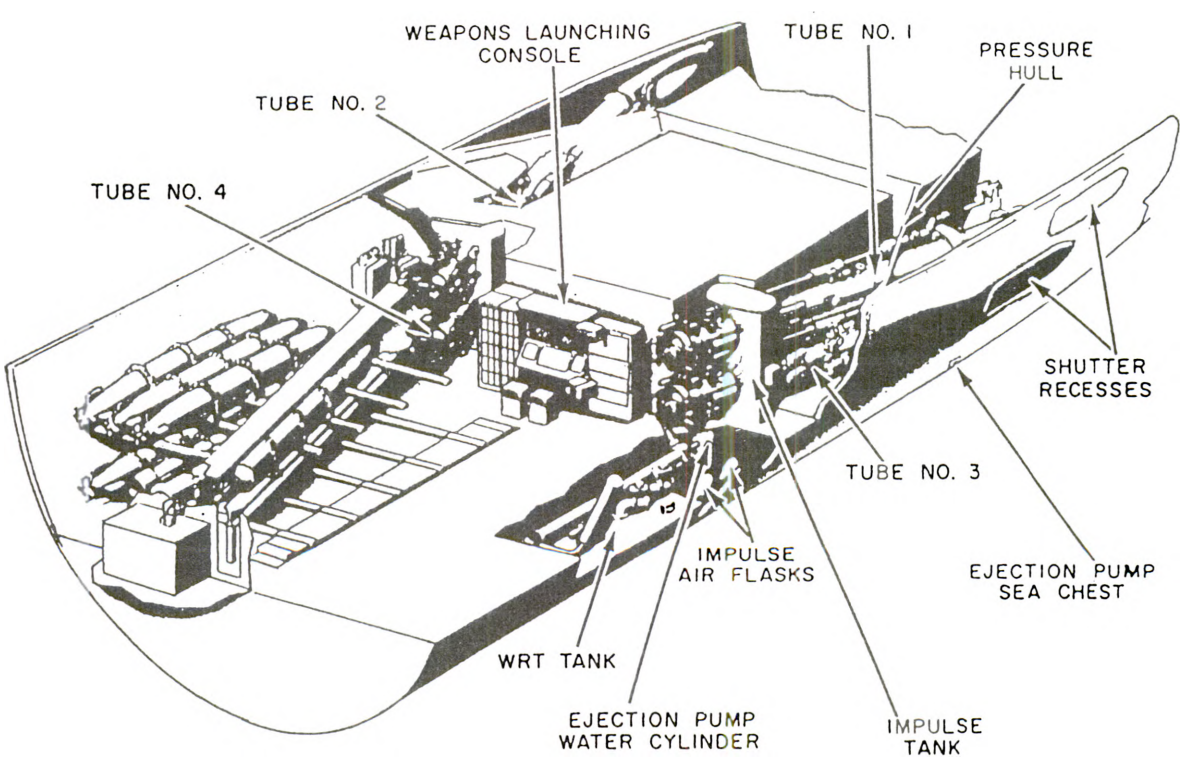

Figure 5-5.—Submarine Torpedo Tubes Mk 63.

Digitized by Google

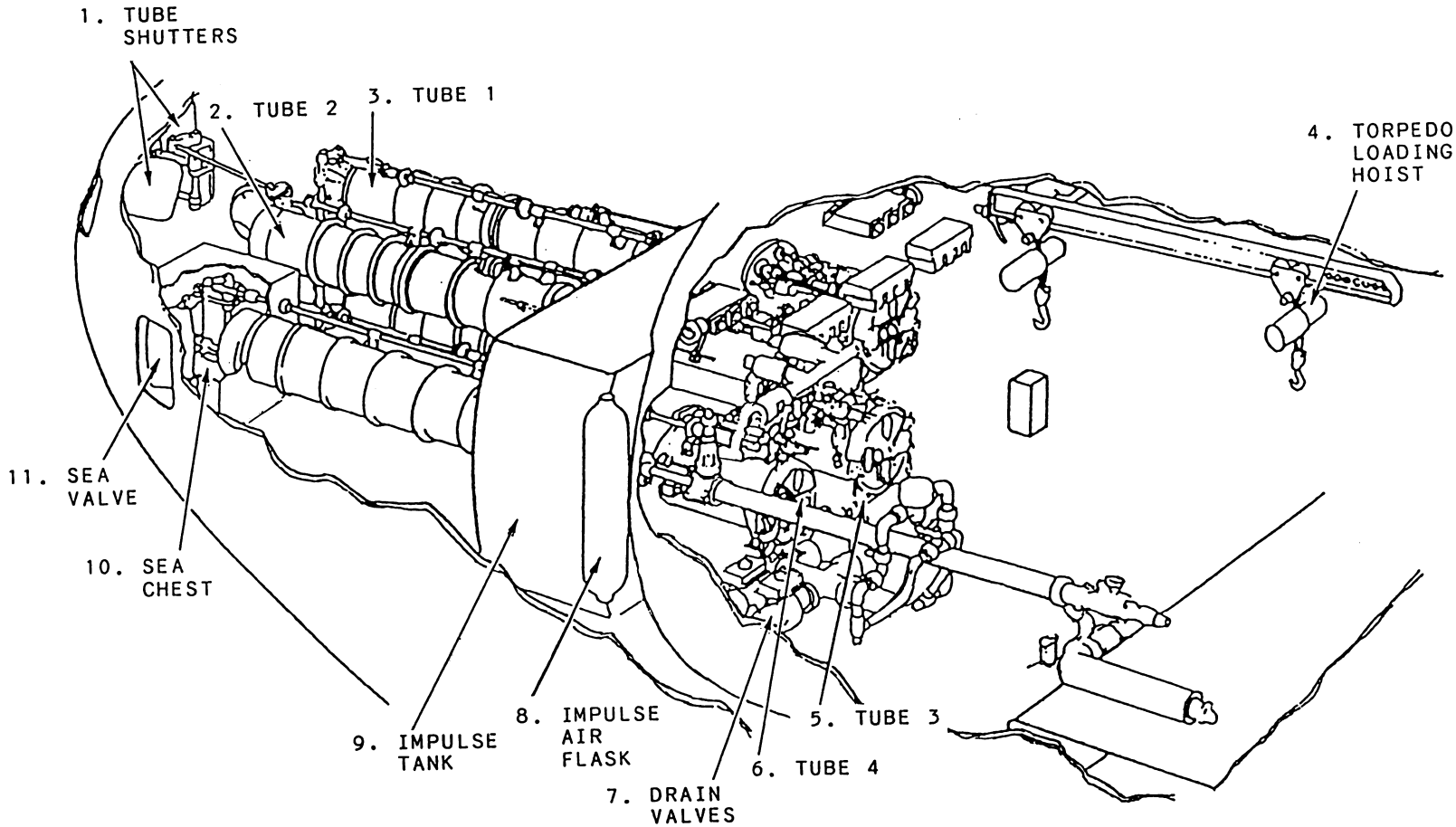

Figure 5-6.—Submarine Torpedo Tubes Mk 65.

Digitized by Google

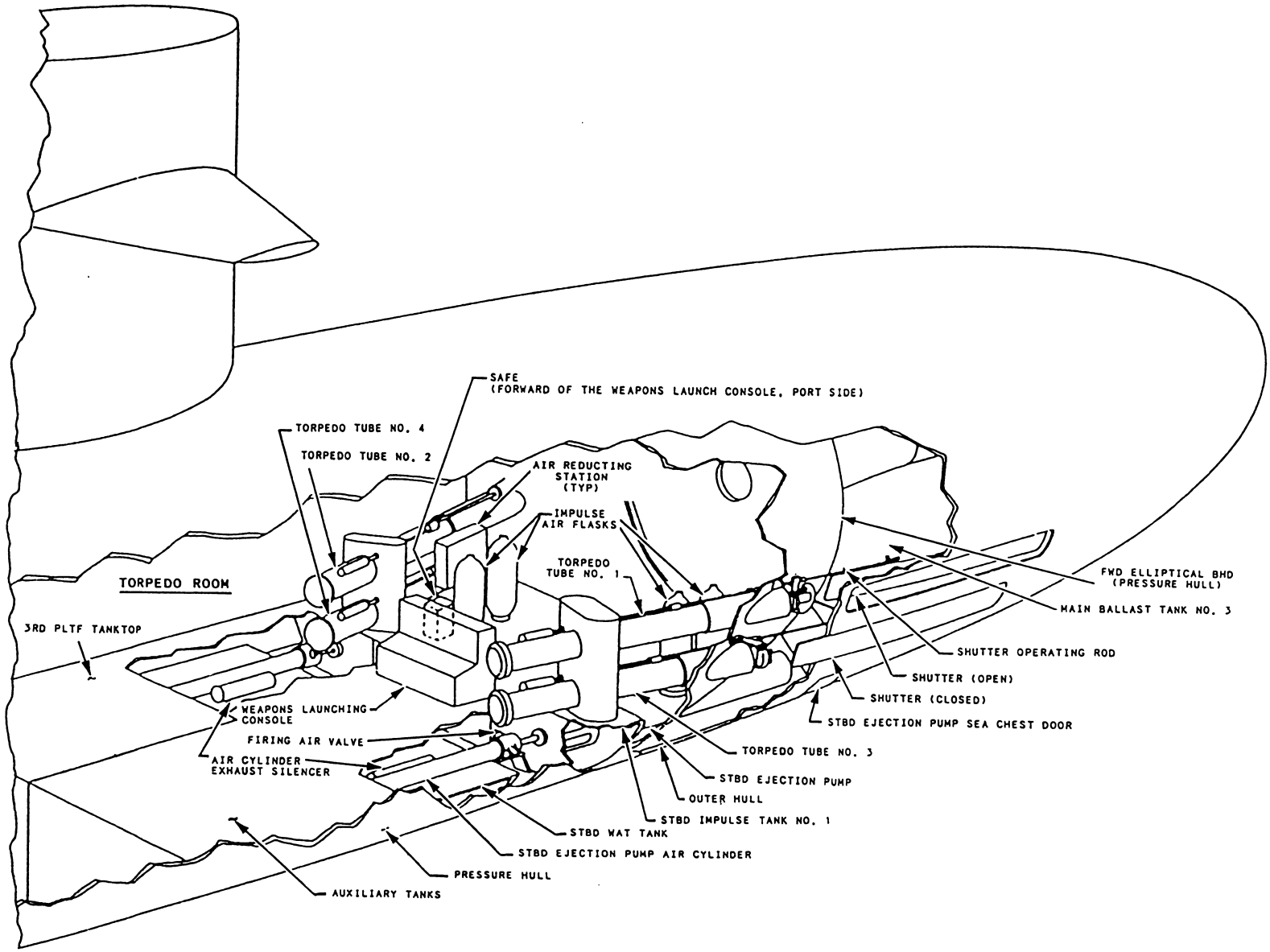

Figure 5-7.—Submarine Torpedo Tubes Mk 67.

Digitized by Google

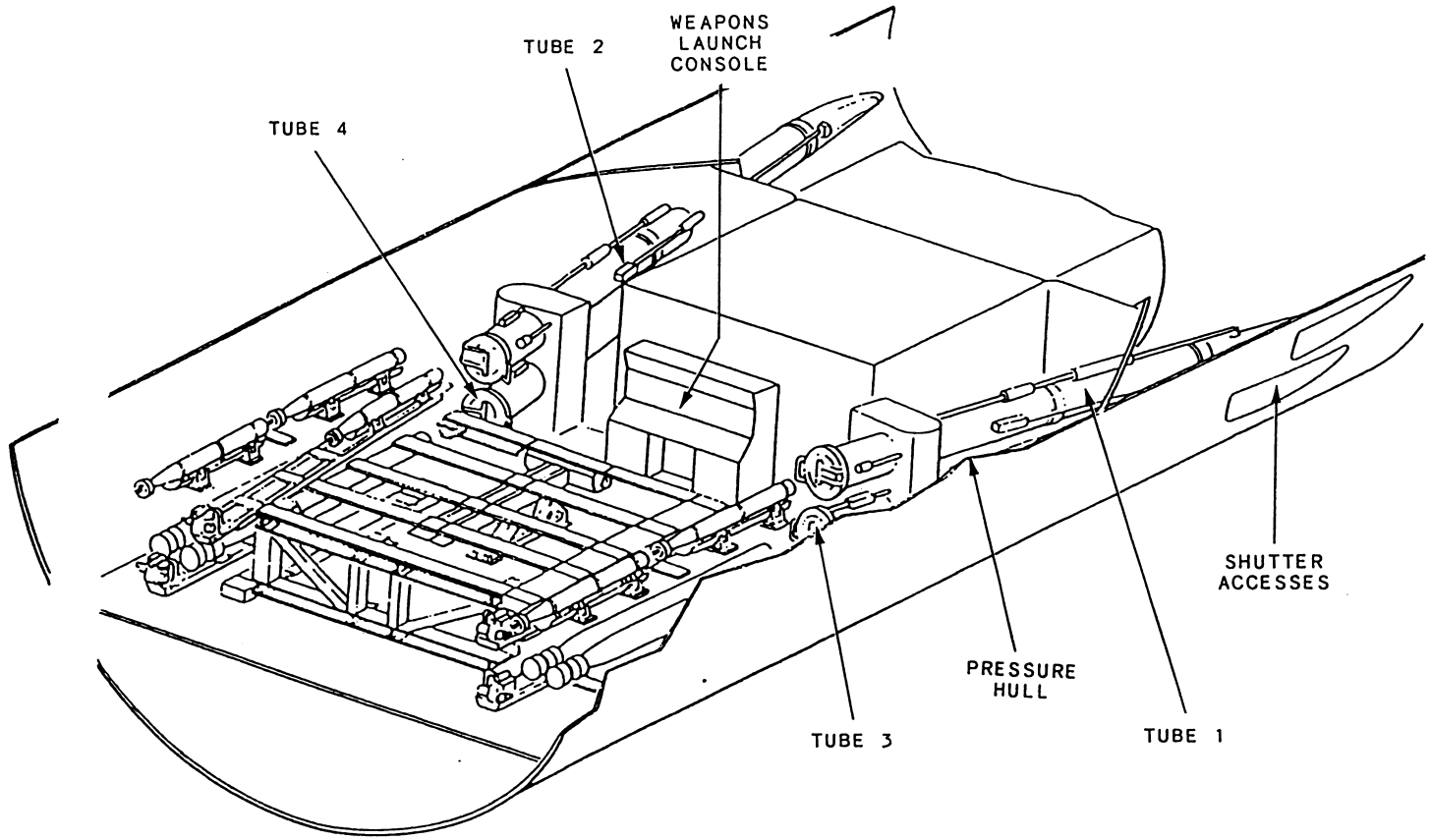

Figure 5-8.—Submarine Torpedo Tubes Mk 68.

Digitized by Google

exposed to sea water. You should keep tube components clean and dry whenever possible.

You must lubricate torpedo tubes and associated components periodically in accordance with the MRCs, using only the proper lubricants. Whenever practicable, exercise components while lubricating. Remember, some lubricants that are satisfactory for steel may corrode bronze or other materials, especially when combined with brine. Some oils thicken, harden, and lose their lubricating qualities when affected by salt and moisture. OD 3000 provides additional information on lubricants, fluids, cleaning and preserving materials, cold weather lubrication, and ordering data.

The purpose of corrective maintenance on a submarine is the same as on a surface vessel: to detect and correct the malfunction. Procedures for troubleshooting, adjustment, disassembly, repair and replacement of components are included in applicable technical manuals for each of the torpedo tubes.

Submarine launching system repair\maintenance actions are divided into three categories: Category A, Category B, Category C.

Category A is any repair or maintenance action accomplished by replacing o-rings, gaskets, incidental hardware (cotter keys, lockwashers, etc.), replacement of calibrated pressure switches, or addition of fluids and lubricants.

Category B is any repair or maintenance action that requires replacement of valve stems, seats, plungers, bodies, complete valve assemblies or fluids. Additionally the adjustments to firing valves, firing control valves, throttle valves, air restrictor valves, and metering valves are also considered Category B.

Category C is any major overhaul or modification action performed by a qualified repair activity, during extended refit period (ERP), shipyard refit availability (SRA), ordnance alterations, etc.

The three most common types of corrective maintenance that you will be concerned with are troubleshooting, adjustments, and component repair.

Table 5-4, is an example of a list of possible tube and component malfunctions, with probable

Table 5-4.—Possible Tube Malfunctions

Symptom	Probable Cause	Remedy
Torpedo tube leaks	1. Nuzzle door not shut	a. Position muzzle door control valve to shut. b. Check adjustment of muzzle door mechanism giving special attention to excessive lost motion. Check that operating cylinder piston travels its full stroke.
	2. Loss of hydraulic pressure to muzzle door operating cylinder	a. Put hand pump on line and use to supply shutting pressure to muzzle door until cause of loss of normal pressure can be located and corrected.
	3. Muzzle door fouled by debris	a. Cycle door open and shut several times to clear debris and allow proper seating of muzzle door. b. Open muzzle door and fire water slug.
	4. Slide valve fouled by debris	a. Open muzzle door and fire water slug to clear tube barrel.
	5. Slide valve operating mechanism out of adjustment	a. Check operating linkage between slide valve and muzzle door. Readjust as required to shut slide valve fully.
	6. Slide valve gaskets worn or damaged	a. Remove and replace defective gaskets.
	7. Drain valve fouled by debris	a. Open drain valve and blow through from tube to WRT tank.

Digitized by Google

Table 5-4.—Possible Tube Malfunctions—Continued

Symptom	Probable Cause	Remedy
Torpedo tube leaks (Continued)	7. Drain valve fouled by debris (Continued)	b. The preceding failing, reverse blowing (from WRT tank to tube), shutting drain valve during blowing. c. Both preceding remedies failing, disassemble, clear, and reassemble drain valve.
	8. Tripping latch leaks	a. Observe same precautions as for Slide valve gaskets worn or damaged. b. Drain impulse tank, open slide valve (disconnect from operating mechanism), remove upper protective grills, and tighten hold-down bolts on tripping latch housing inside impulse tank.
	9. Muzzle door gasket leaks	a. Replace gasket (in drydock).
No relay hold voltage at switchbox P1 pins w and y	1. Stop bolt switch out of adjustment	a. Adjust stop bolt switch so that contacts are closed when stop bolt is at LOAD and FIRE; open at LOCKED.
	2. Electrical firing circuit failure	a. Check power on. b. Check fuses on silent fire and miscellaneous fuse panel.
	3. Faulty stop bolt switch	a. Replace switch with a spare.

causes and remedies. It can be used as a troubleshooting guide, but it does not come close to covering every possible malfunction. If the trouble cannot be located and remedied using the data from table 5-4, a step-by-step inspection of the system components must be initiated.

During normal operation of the torpedo tubes, various components can lose their precise adjustment and cause tube malfunction or reduced operating efficiency. Standard mechanic's tools are carried onboard for djustment of the tube mechanism and associated components. Special tools are illustrated in specific technical manuals for the Mk and Mod of torpedo tube involved along with the adjustment procedures.

An example of an adjustment you might do would be the hand firing key and transfer switch. If an electrically started, impulse launched torpedo fails to start when the hand firing key is positioned at FIRE, an incorrect adjustment of the hand firing key and transfer switch may be the cause. To correct this malfunction, turn the adjusting screw on the hand firing key so that when the key is moved to fire, motion of the transfer switch to EMER POWER is simultaneous with, or slightly before, opening of the firing key valve.

Component repair procedures are specific to particular Mk and Mod's of torpedo tubes. Because of the many variations in configuration, all repairs should be made using their specific technical manual.

The other area of maintenance that you will need to be familiar with is electrical maintenance. So, let's get started and discuss what you might encounter in electrical maintenance.

Digitized by Google

ELECTRICAL MAINTENANCE

There are many electrical and electronic circuits used in ordnance equipment. These circuits perform such jobs as automatic or local control, stabilization, amplification, and overload protection. It is beyond the scope of this chapter to examine each type of circuit individually, but fortunately there is a shortcut. All electrical circuits use basic electrical or electronic devices. These devices, individually or working together, can delay, interrupt, isolate, or integrate electrical and electronic circuits and prevent damage to equipment.

Let's take a little time to discuss some of the main elements of an electrical circuit so you will be able to relate to them when you have to perform maintenance on your equipment in the fleet.

CIRCUIT ELEMENTS

This portion of the chapter covers some of the more common electrical devices used in the ordnance circuits that you will be working with.

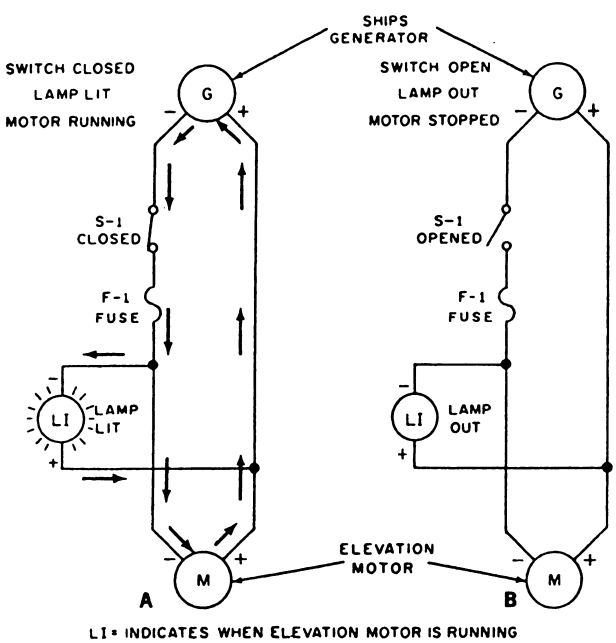

Figure 5-9.—Indicator lights.

Indicator Lights

Indicator lights are used to indicate the position or status of switches, solenoids, fuses, and control and power circuits. Figure 5-9 shows a simplified circuit with a light (L1) that indicates when the motor is running. The L or L1 is a reference designation for lights on the schematics for the older systems; the designation for lights on schematics for new ordnance equipment is DS.

Fuses

The fuse (fig. 5-10) is the simplest form of a circuit protective device. It consist of a metal alloy fusible element that melts at a predetermined value of current. Thus, if a circuit draws more current than the rated value of the fuse, the fuse opens (blows) and the circuit components are protected.

Fuses are rated according to the amount of current they can safely carry; this current is usually measured in amperes. The most common cause of fuse failure is an overloaded circuit. There are, however, other causes. Failure to set the fuse into its contacts properly can cause a fuse to open. The schematic designator for a fuse is the letter F.

Switches

A switch is a device used for making, breaking, or changing the connections in an electric circuit. Switches are used to start and

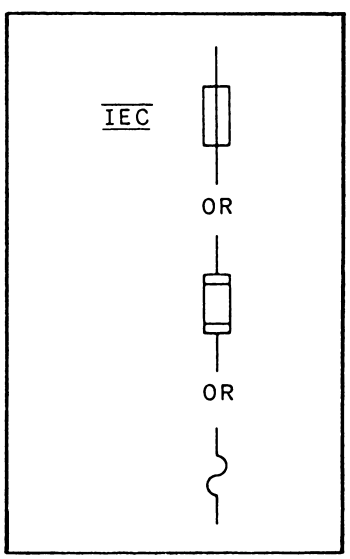

Figure 5-10.—Fuse.

Digitized by Google

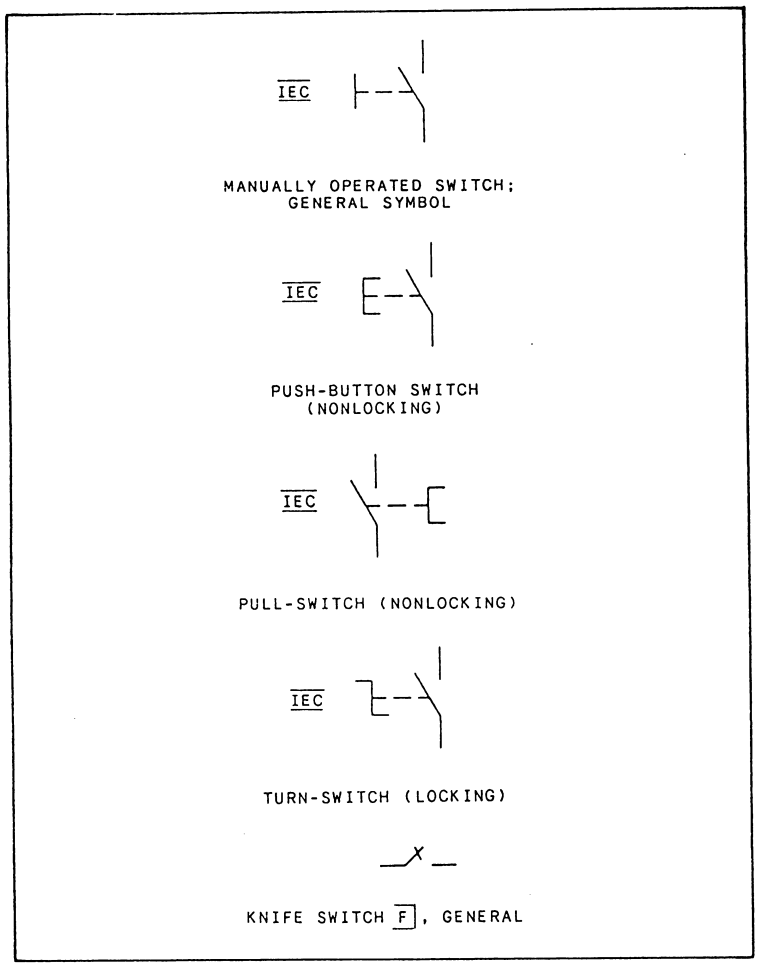

Figure 5-11.—Switches.

stop motors, to turn indicating lights on and off, to channel information from one point in the system to another, and to shift system mode of operation, to name a few of their many uses.

Switches are frequently classified by the number of poles, by the throw, or by the number of positions they have. Another way of classifying switches is by the method of actuation; that is, pushbutton, toggle, rotary, and the like. Switches can also be classified by using the trade name of the manufacturer. Figure 5-11 shows an example of four different switches. The designator for switches on a schematic is the letter S.

Relay

A relay is simply an electromagnetically operated switch. It is designed to open or close a circuit when the current through its coil is applied and removed, or varied in magnitude. The main parts of a relay are a coil wound on an iron core and an armature that operates a set of contacts. A simple relay and circuit are shown in figure 5-12. The schematic designator for a relay is the letter K.

Solenoids

Solenoids convert electrical inputs from control circuits into mechanical outputs that actuate

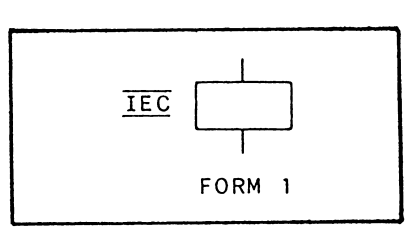

Figure 5-12.—Relay.

Digitized by Google

mechanical linkage or hydraulic valves. The schematic designator for a solenoid is the letter L.

Now that we have introduced you to the circuit, let's talk about where your role in maintenance will come into play. Normally that will be when you have experienced a failure of a circuit either in the torpedo, the torpedo tube or the test equipment.

CAUSES OF CIRCUIT FAILURES

The failure of a circuit to function properly can usually be traced to a break in the circuit (open), a grounded circuit (this permits an undesired path of current return to the source), or a short circuit (a circuit that permits current to bypass a part of the circuit.

Any of these faults affect the current and voltage values and causes the circuit to function improperly.

Open circuits may result from dirty or loose connections, improperly installed wire, mechanical damage, faulty installation or repair, and vibration. If connections are clean and tight, no resistance is added to the circuit.

Short circuits are low-resistance paths or shortcuts that cause the current to bypass the load. The current from the source passes through the "short" instead of the load, causing the load to function improperly. Most shorts are accidental. They occur when vibration wears away the insulation, when saltwater gets into connection boxes, when heat melts away insulation, and when an act of carelessness brings two conductors together.

A grounded circuit is one in which one side of the path is connected to ground either intentionally or accidentally. An intentionally grounded circuit uses a ground which is the ship's hull, equipment chassis, etc., as one side of the line or one conductor. If the "hot side" conductor of a grounded source touches ground accidentally, a short circuit results. Power circuits in the Navy are not grounded and must be insulated from ground at all times. One side of this circuit may be grounded accidentally, and no harm will result; but if both sides are grounded, a short circuit is the result. An ungrounded circuit has a safety feature. If anyone accidentally touches one side of an ungrounded circuit, there will be no path for current flow through the body to the other side of the source. This is one reason why power circuits in the Navy are insulated from ground.

Now I'm sure your next question is, how do I determine what has happened to my equipment? That is where our next area of discussion comes into play: troubleshooting.

TROUBLESHOOTING

Before we discuss the details of troubleshooting, let's establish the basic element of satisfactory troubleshooting—a LOGICAL APPROACH. Because of the complex nature of today's electronic systems, whether military or civilian, the people assigned to keep the equipment operational must have highly specific training. These technicians are not superhuman in their understanding of the electronics maintenance for such devices. What is the secret of technicians who have excellent maintenance capabilities? It is simply that they have learned to think logically. Once you have learned the fundamental theories of basic electronic circuitry, you must learn to combine solid theory and logical thinking to apply troubleshooting techniques. This combination forms a complete maintenance system that you can use to keep equipment operating at top efficiency. By using this system, you will be able to divide electronic equipment into functional blocks; you will be able to test equipment, discover deficiencies, and repair them in an orderly and professional manner. This procedure will save you valuable hours that are otherwise wasted in haphazard troubleshooting techniques.

The Six-Step Procedure

A six-step procedure has been adopted to standardize the approach to electronic equipment troubleshooting and maintenance procedures. This procedure saves many hours of needless equipment downtime and costly repairs. Use of this procedure also keeps electronic equipment in a constant state of operational readiness. The six-step procedure is listed below:

1. SYMPTOM RECOGNITION
2. SYMPTOM ELABORATION
3. LISTING OF PROBABLE FAULTY FUNCTIONS
4. LOCALIZING THE FAULTY FUNCTION
5. LOCALIZING TROUBLE TO THE CIRCUIT
6. FAILURE ANALYSIS

Digitized by Google

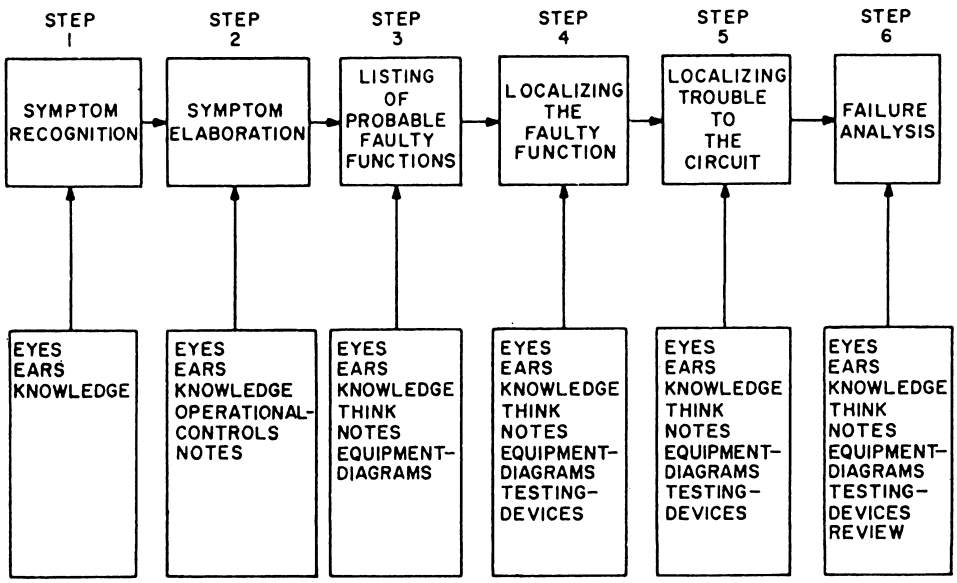

Figure 5-13.—Six-step procedure.

Figure 5-13 shows a breakdown of these steps.

All right, that sounds good, now let's apply it. The first step in logical troubleshooting is to recognize the normal condition of a piece of equipment. In other words, you should know when everything is working properly. Symptom recognition is, therefore, just what it says—the recognition of a situation which is not a normal condition. With this step completed, you are ready for step two, symptom elaboration.

Symptom elaboration is the next logical step once you have detected a malfunction. Most electronic equipments have operational controls, additional indicating instruments, and/or other built-in aids to assist you in evaluating the performance of the equipment. Do not overlook anything. The smallest bit of information you collect at this point may lead to the solution of the problem.

When you have found all of the symptoms of the malfunction, the third step is to list, either mentally or on paper, the possible causes of these symptoms. Many manufacturers' technical manuals list the "probable cause" in the corrective maintenance sections.

After evaluating the symptoms, you have made decisions as to the most likely areas in which the trouble could occur (step three). Armed with a complete set of symptoms and with the probable cause for these symptoms, you are ready for the fourth step of the six-step procedure—localizing the faulty function. This means that you determine which of the functional units of the equipment is actually at fault. This requires that you use your knowledge of the equipment, as well as technical manuals, notes you have made, and some testing devices. (However, do not use testing devices at the circuit level.) Once you have determined which section of the equipment is malfunctioning, you can move on to step five, localizing the trouble to the circuit.

In this step the use of test equipment is required. You use it to measure or indicate the presence or absence of a signal at various points in the suspected circuit. The signal is traced from its source until lost at some test point. Once you have localized the failure to a specific part of the circuit, you should move on to step six, failure analysis.

During step six of troubleshooting, you should use every method of isolation to discover the faulty part. However, locating the faulty part does not complete step six. You should also determine the cause of the failure. To determine if there are multiple malfunctions, you should consider the effect that the malfunction of the component has on the operation of the equipment. If the component is the probable cause of the abnormal symptoms produced in earlier steps, then you can logically assume that the component is at fault. If not, use your knowledge of electronics and the equipment to determine what other malfunction(s) could also produce the same symptoms and indications.

Digitized by Google

Let's take a moment to discuss the types of circuit checks we have been discussing and the most common types of devices used to do these checks.

Types of Circuit Checks

There are three basic circuit checks used to locate shorts, grounds, and open circuits within electric and electronic equipment.

1. Voltage (volt) checks
2. Current (amperes) checks
3. Resistance (ohms) checks

Voltage checks reveal the amount of potential force present to move electrons in a circuit.

Current checks show the actual amount of current flowing through the circuit.

Resistance checks tell the resistance characteristics of the circuit; that is, how much opposition the circuit offers to the flow of current.

With the proper use of test equipment, failures in electric and electronic circuits can be detected and isolated to specific components by using one of these three checks.

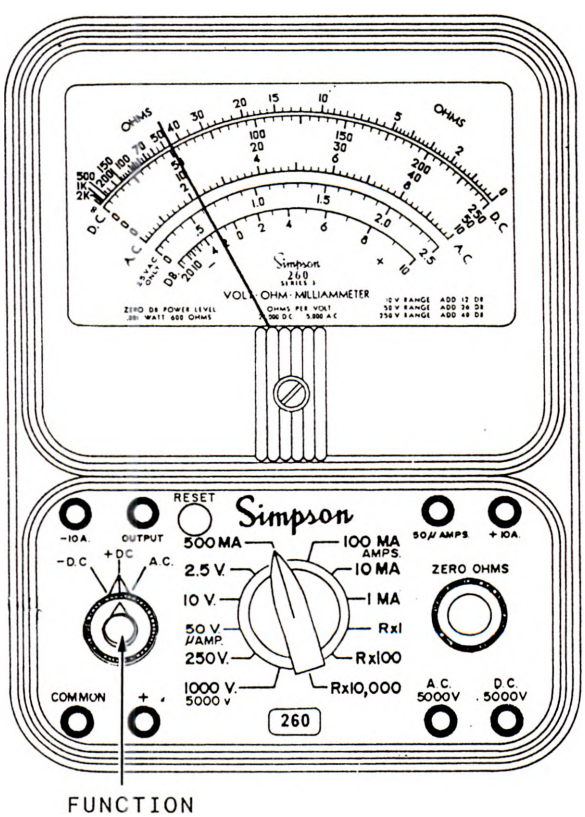

Figure 5-14.—Simpson 260.

Since volts, amperes,and ohms are units of electrical measure, some measuring device must be used to measure them. One device used for this purpose is the multimeter.

The Simpson 260 and the fluke 77\AN are the most commonly used types of multimeters. The Simpson 260 is shown in figure 5-14. It has a large easy-to-read 4-1\2 inch indicating instrument at the top of the front panel. Below the indicating instrument are three operating controls, eight circuit jacks, and the RESET button. All switch positions and circuit jacks are marked with white characters on a black background to ensure long-lasting readability.

Let's discuss one more area of electrical maintenance that you will be involved in from time to time. That is the synchro circuit.

SYNCHRO CIRCUIT

Synchros play a very important role in the operation of Navy equipment. Synchros are found in just about every weapon, communication, underwater detection, and navigation system used in the Navy. The importance of synchros is sometimes taken lightly because of their low failure rate. However, the technician who understands the theory of operation and alignment procedures for synchros is well ahead of the problem when a malfunction does occur.

Figure 5-15 shows a phantom view of a typical synchro. A synchro resembles a small electrical motor in size and appearance and operates like

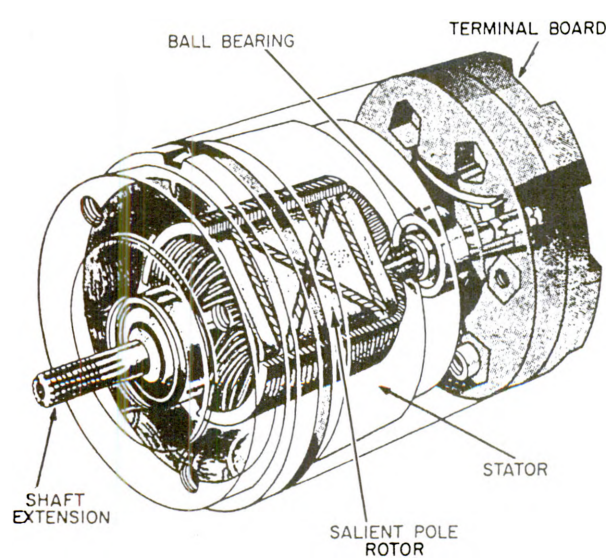

Figure 5-15.—Phantom view of a synchro.

Digitized by Google

a variable transformer. The synchro, like the transformer, uses the principle of electromagnetic induction.

Synchros are used primarily for the rapid and accurate transmission of information between equipment and stations. The changes in course, speed, and range of targets or missiles, the angular displacement (position) of the ship's rudder, and the changes in the speed and depth of torpedoes are but a few of the numerous kinds of information transmitted. The speed and accuracy of the transmitted information are most important. Synchros can provide this speed and accuracy.

One of your duties as a Torpedoman is to keep the synchro systems in your equipment in good working order. Therefore, it is essential that you become familiar with the details of synchro maintenance and repair.

First, let us consider some of the more common problem areas that you should avoid when working with synchros. As with any piece of electrical or electronic equipment, if it works—let it alone. Do not attempt to zero a synchro system that is already accurately zeroed just because you want to practice. More often than not, the system will end up more out of alignment than it was before you attempted to rezero it. Do not attempt to take a synchro apart even if it is defective. A synchro is a piece of precision equipment, which requires special equipment and techniques for its disassembly. A synchro, unlike an electric motor, does not require periodic lubrication. Therefore, never attempt to lubricate a synchro. Synchros also require careful handling. So, you should never force a synchro into place, never use pliers on the threaded shaft, and never force a gear or dial on the shaft.

Troubles in new and modified synchro systems are most often due to (1) improper wiring and (2) misalignment due to synchros not being zeroed. It is your responsibility to find and correct these troubles. Improper wiring can be checked with an ohmmeter by making a point-to-point continuity and resistance check. Misalignment of a synchro system can be corrected by rezeroing the entire system.

There are various methods for zeroing synchros. Some of the more common zeroing methods are the voltmeter, the electrical-lock, and the synchro-tester methods. The method used depends upon the facilities and tools available and how the synchros are connected in the system. Also, the method for zeroing a unit whose rotor or stator is not free to turn may differ from the procedure for zeroing a similar unit whose rotor or stator is free to turn. Refer to Navy Electricity and Electronics Training Series (NEETS) Module 15, for detailed procedures on the adjustment and zeroing of the various types of synchros.

SUMMARY

As with all the work you perform as a Torpedoman, safety plays a key role in maintenance that you are required to perform. We have introduced you to the major concerns with mechanical and electrical safety.

We discussed in general the preventive and corrective maintenance guidelines concerning mechanical and electrical maintenance.

To help you to relate to your mechanical maintenance requirements, we went into some specifics concerning torpedo tubes. In so doing, we discussed surface vessel torpedo tube maintenance and submarine torpedo tube maintenance.

Under electrical maintenance we introduced you to the various elements of a circuit, some of the major causes of failure within a circuit, the six-step troubleshooting procedures, and the different types of circuit checks that you will be expected to perform.

Finally, we discussed the synchro circuit; what it does, some of the problems you might experience with it, and the adjustments you would be expected to perform.

Your responsibilities concerning maintenance cover a wide range. To meet this need, we have exposed you to these different areas and provided the references when needed.

REFERENCES

Fire Control Technician (Gun) 3 & 2, NAVEDTRA 10288, Commanding Officer, Naval Education and Training Program Management Support Activity, Pensacola, Fla., 1985.

Gunner's Mate G 3 & 2, NAVEDTRA 10185-C1, Commanding Officer, Naval Education and Training Program Management Support Activity, Pensacola, Fla., 1981.

Digitized by Google

Navy Electricity and Electronics Training Series, Module 16, *Introduction to Test Equipment*, NAVEDTRA 172-16-00-84, Commanding Officer, Naval Education and Training Program Management Support Activity, Pensacola, Fla.,1984.

Navy Electricity and Electronics Training Series, Module 15, *Principles of Synchros, Servos, and Gyros*, NAVEDTRA 172-15-00-80, Commanding Officer, Naval Education and Training Program Management Support Activity, Pensacola, Fla., 1980.

Submarine Torpedo Tube Mk 65 Mods 1 through 4, SW395-B1-MMA-010/Mk 65 1-4, Commander, Naval Sea Systems Command, Washington, D.C., 1990.

Submarine Torpedo Tube Mk 63 Mods 1 through 12, NAVSEA OP 3548, Commander, Naval Sea Systems Command, Washington, D.C., 1977.

Supplement to Graphic Symbols for Electrical and Electronics Diagrams, ANSI/IEEE Std 315A-1986, Institute of Electrical and Electronics Engineers, New York, N.Y.,1986.

Surface Vessel Torpedo Tube Mk 32 Mods 5 and 7, SW395-AC-MMO-010/OP 3355, Commander, Naval Sea Systems Command, Washington, D.C., 1982.

Surface Vessel Torpedo Tube Mk 32 Mod 9, SW395-AD-MMO-010/Mk 32 Mod 9, Commander, Naval Sea Systems Command, Washington, D.C., 1982.

Surface Vessel Torpedo Tube Mk 32 Mod 14, SW395-AE-MMO-010/Mk 32 Mod 14, Commander, Naval Sea Systems Command, Washington, D.C., 1981.

Digitized by Google

Digitized by Google

APPENDIX I

GLOSSARY

AD—Destroyer tender.

ADCAP—Advanced capability.

AEL—Allowance equipage list.

AFS—Airframe separation band.

APL—Allowance parts lists.

APM/L—Assistant program manager—logistics.

AS—Submarine tender.

ASROC—Antisubmarine rocket.

ASW—Antisubmarine warfare.

ATR—Ammunition transaction report.

AUR—All-up-round. Any missile, rocket, or torpedo that is provided as a complete assembly.

AUTEC—Atlantic Undersea Test and Evaluation Center.

BIT—Built-in-test.

CAIMS—Conventional ammunition integrated management system.

CFE—Contractor furnished equipment.

CL—Checklist.

CLS—Capsule launching system.

CMOS—Complimentary metal oxide semiconductor.

CMP—Cruise missile project.

CO—Carbon monoxide.

CPR—Cardiopulmonary resuscitation.

COSAL—Coordinated Shipboard Allowance List.

COSBAL—Coordinated Shorebased Allowance List.

DIRSSP—Director, Strategic Systems Program.

DIW—Dead in the water.

DLA—Defense Logistics Agency.

DLR—Depot level repairable.

DMS—Digital missile simulator.

DOD—Department of Defense.

DOT—Department of Transportation.

DOT CLASS—A hazard class affixed to any item having explosive content or other injurious elements denoting the handling and shipping established by the Department of Transportation for safety in transportation.

DSLE—Deployed shelf-life evaluation.

EHCLS—Encapsulated Harpoon Command and Launch Subsystems.

EHCTV—Encapsulated Harpoon Certification and Training Vehicle.

EHWS—Encapsulated Harpoon Weapon System.

EOD—Explosive ordnance disposal.

ERP—Extended refit period.

ESD—Electrostatic discharge.

Digitized by Google

FCA—Fleet calibration activity.

FIR—Functional item replacement.

FLAMMABLE—A flammable material is one that is easily ignited and burns readily.

FLTAC—Fleet Analysis Center.

FRD—Formerly Restricted Data.

FSCM—Federal Supply Code for Manufacturer.

FSS—Federal Supply Service.

G&C—Guidance and control.

HARPOON—Underwater-surface attack guided missile.

HCN—Hydrogen cyanide; a by-product from the combustion of Otto Fuel II.

HTTDS—Heavyweight Torpedo Technical Data System.

ICC—Interstate Commerce Commission.

ICM—Inventory control manager.

ILO—Integrated Logistics Overhaul.

ILOP—Integrated Logistic Overhaul Program.

IMA—Intermediate Maintenance Activity.

ISA—Ignition and Separation Assembly.

ISEA—Inservice Engineering Agent.

ISSE—Inservice support equipment.

JCMP—Joint Cruise Missile Project.

MDCS—Maintenance Data Collection System.

METROLOGY—The science of weights and measures.

MK—Mark.

MOD—Modification.

MOSS—Mobile Submarine Simulator.

MRC—Maintenance requirement card.

MSD—Material Support Data.

NAVAIR—Naval Air Systems Command.

NAVAIRSYSCOM—Naval Air Systems Command.

NAVMAG—Naval magazine.

NAVSEA—Naval Sea Systems Command.

NAVSEASYSCOM—Naval Sea Systems Command.

NDT—Nondestructive testing.

NFRI—Not ready for issue.

NICN—Navy Item Control Number.

NOS—Naval Ordnance Station.

NOSC—Naval Ocean Systems Center.

NSC—Naval Supply Center.

NSN—National stock number.

NSPCC—Naval Ship' Parts Control Center.

NSTM—Naval Ships' Technical Manual.

NUSC—Naval Undersea Systems Center.

NUWES—Naval Undersea Warfare Engineering Station.

NWS—Naval Weapons Station.

NWSC—Naval Weapons Support Center.

OD—Ordnance data. A publication that contains test, inspection, installation, description, maintenance, and operational data on components of ordnance equipment.

OP—Ordnance pamphlet. A basic publication that deals with specific ordnance equipment, or subjects within the field of ordnance. Can be used to identify an operating procedure.

ORDALT—Ordnance alteration.

OSA—Outfitting Supply Activity.

Digitized by Google

OTTO FUEL II—A liquid monopropellant developed by Dr. Otto Reitlinger.

PG—Procedural guide.

PMS—Planned Maintenance System.

PMTC—Pacific Missile Test Center.

PPM—Parts per million.

PSI—Pounds per square inch.

PSIG—Pounds per square inch gauge.

QA—Quality assurance.

QAP—Quality Assurance Plan.

QATIP—Quality Assurance Test and Inspection Plan.

RASP—Range and Airframe Separation Programmer.

RAV—Restricted availability.

REBIT—Reliability Enhanced Baseline Improved Torpedo.

REM—Recovery Exercise Module.

REXTORP—Recoverable Exercise Torpedo.

RFI—Ready for issue.

ROH—Regular Overhaul.

RTT—Rocket-thrown torpedo.

RUDTORPE—Report of an unsatisfactory or defective torpedo or equipment.

SAFETY RULES—A set of rules approved by the Secretary of Defense and promulgated by the CNO, which governs specific operations of a nuclear weapons system.

SEACALMIS—Naval Sea Systems Command Calibration Management Information System.

SHE—Service handling equipment.

S & I—Storage and Issue.

SIP—Standard Inspection Procedures.

SPCC—Ships' Parts Control Center.

SPETERL—Ship' Portable Electrical/Electronics Test Equipment Requirements List.

SRA—Shipyard refit availability.

SSF—Submarine Support Facility.

STE—Service test equipment.

SWF—Special Weapons Facility.

SWL—Safe working load.

SWOP—Special Weapons Ordnance Publication.

THS—Torpedo-handling system.

TIES—Torpedo instrumentation and exercise section.

TMD—Torpedo mounted dispenser.

TMIS—Torpedo Management Information System.

TOMFISH—Tomahawk Fitment Shape.

TOTEM—Tomahawk Test Missile.

TPE—Tomahawk Preparation Facility.

TRB—Torpedo recovery boat.

TSS—Test set simulator.

TWF—Tomahawk Weapons Facility.

TWR—Torpedo weapons retriever.

TYCOM—Type commander.

UIC—Unit Identification Code.

UGM—Underwater to surface-attack guided missile.

UR—Unsatisfactory report.

VAND—Vacuum, Air, and Nitrogen System.

VLA—Vertical launch ASROC.

WDM—Warshot depot maintenance.

WPNSTA—Weapon station.

WSE—Workshop support equipment.

Digitized by Google

Digitized by Google

INDEX

A

ASROC missile maintenance, 4-1
  ASROC reporting system, 4-8
  intermediate level, 4-1
  organizational level, 4-1
  reporting requirements, 4-8
ASROC reporting system, 4-8

C

Cautions, 1-2
Circuit elements, 5-21
  fuses, 5-21
  indicator lights, 5-21
  relays, 5-21
  solenoids, 5-22
  switches, 5-21
Corrective maintenance, 5-7

D

Depot maintenance, 2-3
Dynamic load test, 1-23

E

Electrical, 3-2
Electrical maintenance, 5-21
  circuit elements, 5-21
  circuit failures, causes of, 5-23
  troubleshooting, 5-23
Electrical safety, 5-3
  de-energized circuits, working on, 5-5
  electric shock, 5-3
  electrical fires, 5-5
  energized circuits, working on, 5-4

F

Fixed ramp recovery vessel (TWR/TRB), 1-28

G

General maintenance, 5-6

H

Handling, 1-11,
  equipment, 1-11
  handling operations, 1-15
  precautions, 1-11
Handling equipment, 1-11
Handling operations, 1-15
Heavyweight torpedo maintenance concept, 3-3

I

Inspection and test records, 1-25
Intermediate level maintenance Mk 46 torpedo, 2-16
  general maintenance information, 2-16

L

Load test, 1-23
  dynamic load test, 1-23
  static load test, 1-23
Loading, 1-16
  submarine, 1-17
  surface ship, 1-17

M

Maintenance activity data management reports, 2-4
Maintenance responsibility, 2-4
  maintenance activity data management reports, 2-4
Mechanical maintenance, 5-8

Digitized by Google

Mechanical safety, 5-2
hydraulic/pneumatic safety, 5-2
tool safety, 5-3
Mk 46 Mod 5 torpedo maintenance requirements, 2-5
combination report, 2-12
intermediate level maintenance Mk 46 torpedo, 2-16
ORDALT, 2-12
postrun turnaround maintenance, 2-20
quality assurance checklist/shop traveler, 2-5
rapid feedback system, 2-15
RUDTORPE, 2-12
torpedo configurations, 2-19
Mobile submarine simulator (MOSS) System Mk 70 Mod 0, 4-27
depot level maintenance, 4-30
intermediate level maintenance, 4-28
organizational level maintenance, 4-27
records and reports, 4-30

N

NO-LOAD test, 1-22
component inspection, 1-22
conveyor, 1-22
cranes, 1-22
dumbwaiter, 1-22
hoist, 1-22
Notes, 1-2

O

Organizational level maintenance, 3-5, 4-11
depot level, 4-12
documentation records and reports, 4-14
intermediate, 4-12
support program, 4-13
Organizational level maintenance Mk 46 torpedo, 2-7
Organizational maintenance, 2-1
deficiency report, 2-9
patrol maintenance, 2-7
postrun preservation, 2-8
preparation of RFI torpedoes for issue, 2-7
preventive maintenance for stowed torpedoes, 2-8
recording of repairs and torpedo maintenance data form reporting, 2-9
Otto fuel hazard, 3-1
Over-the-side recovery, 1-34

P

Portable ramp recovery vessel, 1-33
Post-recovery, 1-36
Mk 46 torpedo, 1-36
Mk 48 torpedo, 1-36
Preventive maintenance, 5-6

Q

Quality assurance checklist/shop traveler, 2-5

R

Rapid feedback system, 2-15
Records and reports, 3-31
Torpedo Management Information System (TMIS), 3-33
Recovery equipment, 1-27
Recovery methods, 1-28
fixed ramp recovery vessel (TWR/TRB Recovery), 1-28
over-the-side recovery, 1-34
portable ramp recovery vessel, 1-33
RUDTORPE, 2-12
combination report, 2-12
ORDALT, 2-12

S

Safety, 1-1
cautions, 1-2
notes, 1-2
safety philosophy, 1-1
safety precautions, 1-2
safety summary, 1-3
warnings, 1-2
Safety, 3-1
electrical, 3-2
handling equipment, 3-2
Otto fuel hazard, 3-1
Safety, 5-1
electrical safety, 5-3
mechanical safety, 5-2
Safety philosophy, 1-1
Safety precautions, 1-2
Safety summary, 1-3
Shipping, 1-5
canning, 1-6
shipping container, 1-5

Digitized by Google

Shipping container, 1-5
accept/reject, 1-10
ASROC, 1-5
CNU-308/E, 1-6
Harpoon, 1-6
inspection, 1-10
Mk 178, 1-6
Mk 321 missile, 1-6
Mk 46 missile, 1-6
Mk 46 torpedo, 1-5
Mk 48 torpedo, 1-5
Mk 481 Mod 1, 1-5
Mk 535, Mod 0, 1-5
Mk 535 Mod 1, 1-6
Mk 630 Mod 0, 1-6
Tomahawk All-up-Round (AUR), 1-6
Static load test, 1-23
Synchro circuit, 5-25

T

Tomahawk maintenance, 4-19
depot level, 4-23
documentation, 4-26
intermediate level, 4-23
organizational level, 4-20
record book, 4-26
reports, 4-26
support program, 4-23
Torpedo maintenance, 3-2
container maintenance, 3-29
heavyweight torpedo maintenance concept, 3-3
intermediate level maintenance, 3-6
item classification, 3-2
maintenance information, 3-3
Mk 48 torpedo depot level maintenance, 3-29
organizational level maintenance, 3-5
special tools, 3-29
Torpedo maintenance cycle, 2-3
Torpedo maintenance program (general), 2-1
depot maintenance, 2-3
intermediate maintenance, 2-1
organizational maintenance, 2-1
torpedo maintenance cycle, 2-3
Torpedo Management Information System (TMIS), 3-33
Torpedo tube maintenance, 5-9
submarine torpedo tube maintenance, 5-15
surface vessel torpedo maintenance, 5-9
Troubleshooting, 5-23
circuit checks, types of, 5-25
six-step procedures, 5-23

W

Warnings, 1-2
Weigh test, 1-22
inspection and test record, 1-25
load test, 1-23
NO-LOAD test, 1-22

☆ U.S. GOVERNMENT PRINTING OFFICE:1991-631-080/40068

Digitized by Google

Digitized by Google

Digitized by Google

UNIVERSITY OF ILLINOIS-URBANA
3 0112 105056482

Digitized by Google